A Simple Solution for **BETTER JIGS & FIXTURES**

FINISH FLAWS & How to Fix Them

Choose the Right **GLUE FOR THE JOB**

Woodsmith®

Woodsmith.com

Vol. 35 / No. 208

FLAT-SCREEN CABINET

NOW YOU SEE IT, NOW YOU DON'T!

INSIDE:

Shop Secrets for Better Drill Press Results

Flat, Straight & Square: Master Jointer Techniques

Powered lift mechanism raises TV up from inside the cabinet!

A Publication of August Home Publishing

Table of Contents

from our readers
Tips & Techniques 4

all about
Choosing the Right Glue 8
Not all glues are the same. Learn which type is best for each woodworking task.

tools of the trade
Woodsmith GO ONLINE EXTRAS
Drill Press Upgrades 10
A few shop-made accessories make this essential shop tool work even harder.

jigs & fixtures
Magswitch System 12
You'll quickly become "attached" to this unique new workholding system.

tips from our shop
Shop Notebook 28

working with tools
Jointer Techniques 42
We'll show you how to start your projects out on the right foot using this shop workhorse.

finishing room
Minor Finish Repairs 46
You can make a dinged up finish look like new. All it takes is a few basic tools.

details of craftsmanship
Mitered Shoulder Dovetails 48
This hybrid combines all the best features of two valuable woodworking joints.

in the mailbox
Q & A 50

hardware & supplies
Sources 51

Oak Nightstand page 14

Dartboard Cabinet page 22

projects

heirloom project

Oak Nightstand 14

I think you'll agree that the third installment in our bedroom suite is every bit as attractive, practical, and easy to build as the first two.

designer series project

Dartboard Cabinet 22

How often do you come across a project that provides an enjoyable experience both during and after the build? This one hits the bullseye.

heirloom project

TV Lift Cabinet 30

This handsome, practical cabinet, with its built-in TV lift is guaranteed to take your viewing pleasure to a new level — literally.

TV Lift Cabinet page 30

editor's note
Sawdust

One of the reasons I enjoy woodworking is that it gives me the opportunity to escape from the chaos of the world and spend some "alone" time in my shop. But on the other hand, woodworking can sometimes be a very solitary hobby. So when I heard about the *Handworks* tool show in Amana, Iowa in May, I decided to check it out. I thought it would be a good opportunity to rub elbows with other woodworkers.

Honestly, I wasn't exactly sure what to expect. But as I drove up to the site of the show (an old, timber-framed barn), I was pleasantly surprised at the huge crowd of people waiting to get inside. And once I made my way through the doors, it was easy to see why. There were approximately 20 different hand tool makers with their wares set out on workbenches for folks to test out — planes, chisels, saws, marking knives, and layout tools. Being able to try out tools from so many makers all in one place made it like a smorgasbord for woodworkers. But best of all, being around so many fellow woodworkers really helped to rekindle my passion for the hobby.

This brings me back to my original point. I encourage you to take your woodworking out of the shop every now and then. If you have the opportunity, visit a woodworking show, attend a woodworking class, or join a local woodworking club. You'll be surprised at how it inspiring it can be.

Help Wanted. We're looking for an editor to join us here at *August Home Publishing* in Des Moines, IA. If you're enthusiastic about woodworking and enjoy being part of a team, let us know. You can apply at our website, AugustHome.com, or email a cover letter and résumé highlighting your experience to Professionals@AugustHome.com. Or if you'd prefer, simply mail it to Human Resources, 2200 Grand Avenue, Des Moines, IA 50312.

Bryan

Woodsmith GO ONLINE EXTRAS

This symbol lets you know there's more information online at Woodsmith.com. There you'll see step-by-step videos, technique and project animation, bonus cutting diagrams, and a lot more.

Tips & Techniques

Space-Saving Tool Cabinet

Space is scarce in my shop, so I wanted a wall cabinet to hold as many tools as possible. I came up with this low-profile tool cabinet, with pegboard on the back and storage on both faces of the doors thanks to magnetic bars.

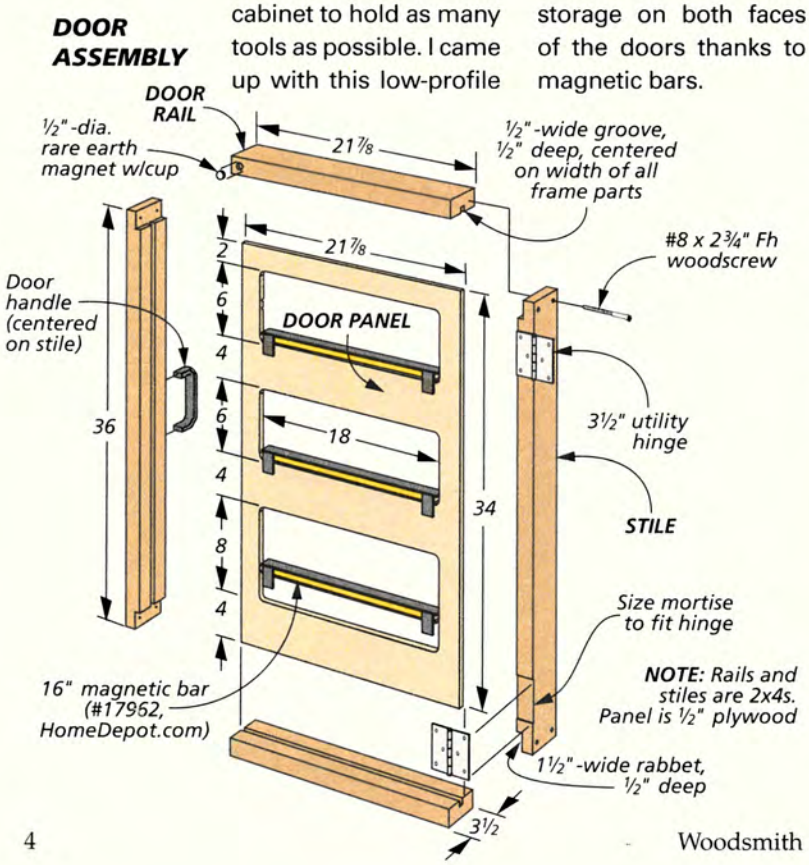

DETAILS. The cabinet consists of three 2x4 frames joined with rabbets, glue, and screws. The door frames have a centered groove in the rails and stiles to accept plywood panels (see illustrations, left and below). The plywood panels each have three cutouts that allow the magnetic bars to work on the front and back of the doors.

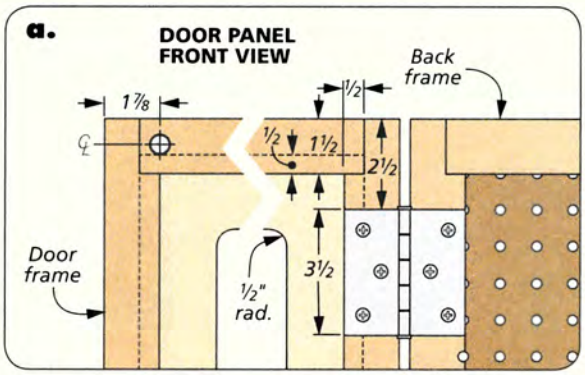

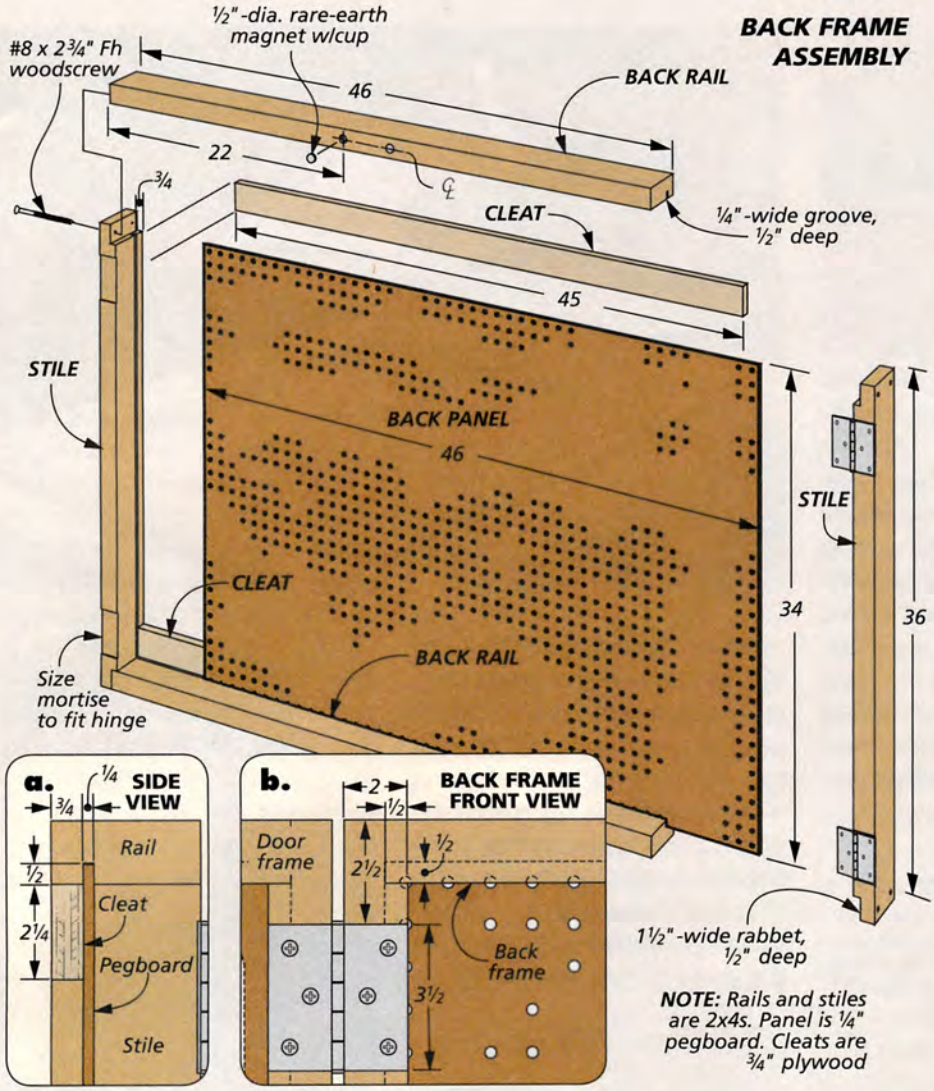

NOTE: *Rails and stiles are 2x4s. Panel is ¼" pegboard. Cleats are ¾" plywood*

The back frame has a groove for pegboard. Two cleats behind the pegboard are used to mount the cabinet to the wall (drawings above).

After assembling the frames, hinge the door frames to the back frame and add magnets to hold them closed. Now all that's left is to mount handles and magnetic bars, and secure the cabinet to wall studs to increase your tool storage.

John Oldenburg
Vancouver, Washington

SUBMIT YOUR TIPS ONLINE

If you have an original shop tip, we would like to hear from you and consider publishing your tip in one or more of our publications. Go to:

Woodsmith.com
Click on the link,
"SUBMIT A TIP"

You'll be able to tell us all about your tip and upload your photos and drawings. You can also mail your tips to *"Woodsmith Tips"* at the editorial address shown at right. We will pay up to $200 if we publish your tip.

FREE TIPS BY EMAIL

Now you can have the best, time-saving secrets, solutions, and techniques sent directly to your email inbox. Just go to **Woodsmith.com** and click on ***"Woodsmith Tips"*** You'll receive one of our favorite tips each week.

Woodsmith®

No. 208 August/September 2013

PUBLISHER Donald B. Peschke

EDITOR Bryan Nelson
MANAGING EDITOR Vincent Ancona
SENIOR EDITORS Ted Raife, Wyatt Myers
ASSOCIATE EDITOR Dennis Perkins
CONTRIBUTING EDITORS Phil Huber, Randall A. Maxey, James Bruton
EDITORIAL INTERN Kristen Smith

EXECUTIVE ART DIRECTOR Todd Lambirth
SENIOR ILLUSTRATORS Harlan V. Clark, Erich Lage, David Kallemyn
SENIOR GRAPHIC DESIGNER Bob Zimmerman
GRAPHIC DESIGNER Becky Kralicek
GRAPHIC DESIGN INTERN Jordan Crozier
CONTRIBUTING ILLUSTRATORS Dirk Ver Steeg, Peter J. Larson

CREATIVE DIRECTOR Ted Kralicek
SENIOR PROJECT DESIGNERS Ken Munkel, Kent Welsh, Chris Fitch, Jim Downing
PROJECT DESIGNER/BUILDER John Doyle
SHOP CRAFTSMEN Steve Curtis, Steve Johnson
SENIOR PHOTOGRAPHERS Crayola England, Dennis Kennedy
ASSOCIATE STYLE DIRECTOR Rebecca Cunningham
SENIOR ELECTRONIC IMAGE SPECIALIST Allan Ruhnke
PRODUCTION ASSISTANT Minniette Johnson
VIDEO EDITOR/DIRECTOR Mark Hayes

Woodsmith® (ISSN 0164-4114) is published bimonthly by August Home Publishing Company, 2200 Grand Ave, Des Moines, IA 50312.
Woodsmith® is a registered trademark of August Home Publishing.

Copyright© 2013 August Home Publishing Company. All rights reserved.

Subscriptions: Single copy: $4.95.
Canadian Subscriptions: Canada Post Agreement No. 40038201. Send change of address information to PO Box 881, Station Main, Markham, ON L3P 8M6.
Canada BN 84597 5473 RT
Periodicals Postage Paid at Des Moines, IA, and at additional offices.
Postmaster: Send change of address to *Woodsmith*, Box 37106, Boone, IA 50037-0106.

WoodsmithCustomerService.com

ONLINE SUBSCRIBER SERVICES

- **VIEW** your account information
- **RENEW** your subscription
- **CHECK** on a subscription payment
- **PAY** your bill
- **CHANGE** your mailing or e-mail address
- **VIEW/RENEW** your gift subscriptions
- **TELL US** if you've missed an issue

CUSTOMER SERVICE **Phone: 800-333-5075**

SUBSCRIPTIONS
Customer Service
P.O. Box 842
Des Moines, IA 50304-9961
subscriptions@augusthome.com

EDITORIAL
Woodsmith Magazine
2200 Grand Avenue
Des Moines, IA 50312
woodsmith@woodsmith.com

AUGUST HOME PUBLISHING COMPANY

Printed in U.S.A.

Pull-Out Worksurface

My shop is small, and my main work area is a countertop that I built above a bank of cabinets. So any way that I can expand my work area in the shop is a blessing. The pull-out worksurface you see here fits squarely into that category.

WORKSURFACE DETAILS. As you can see, the worksurface is simple to make and can be put together with scrap materials. It consists of five parts: a plywood panel, two runners that allow the worksurface to slide in and out from under the counter, and a pair of stops that prevent it from being pulled out completely.

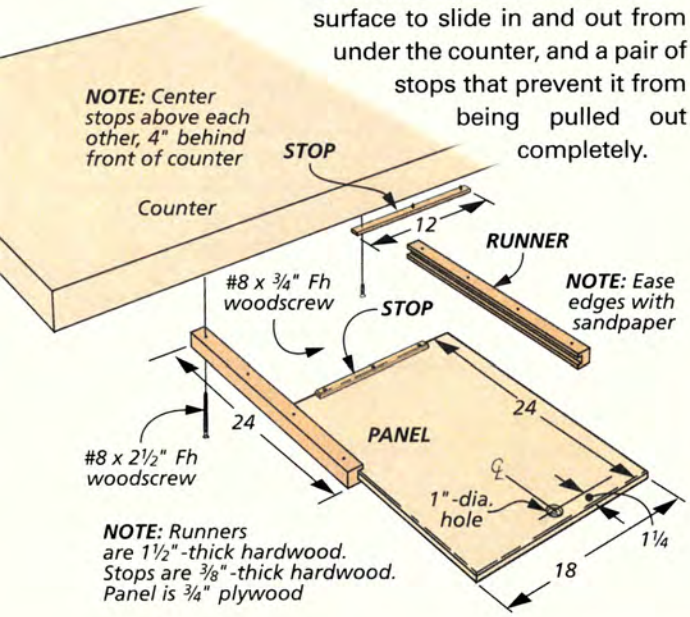

BUILDING THE WORKSURFACE. The most time-consuming part of the project is shaping the runners. Each one has a groove cut in it to capture the plywood panel. I didn't want the panel to sag when fully opened, so I fine-tuned my dado blade to get a smooth, sliding fit with the ¾" plywood.

Once that's done, you can cut the panel to size, add a hole for pulling it out, and screw on a stop. Now find the right spot in your shop for the worksurface, and screw the second stop to the underside of the counter as shown in the drawings. Then you can position the whole assembly under your counter and drive screws into the runners.

Jim Moorehead
Barrigada, Guam

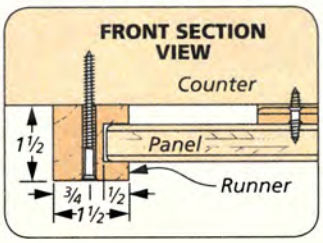

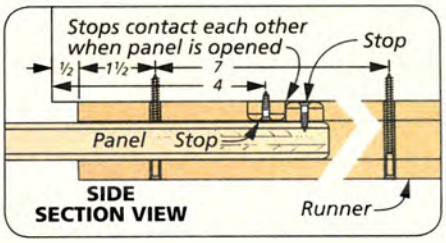

Door Finishing Helper

Recently, I had to finish several solid-wood doors I built for my home. I didn't want to wait for one side to dry before applying finish to the other side, so I came up with this simple solution.

For each end of the door, I made a support from "two-by" material with a ¾"-square cleat centered on one face. Then I centered each support on the end of the door and drove in a few screws. The supports let you finish one side of the door and flip it over immediately to finish the other side. And the cleats help space the supports away from the door to prevent finish from pooling up at the ends.

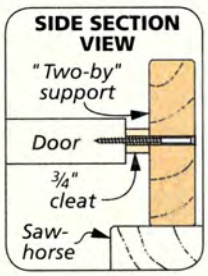

Gregory Cassidy
Peru, New York

Pain-Free Clamping

It's tough to beat a bar clamp for convenient clamping. But I've found that the ones with a 2½" throat capacity often put your knuckles awfully close to the bar as you tighten the clamp. That can make for some uncomfortable clamping.

HANDLE EXTENSION. Luckily, I found a simple solution that's made these clamps a bit more user-friendly. A piece of 1" Schedule 40 PVC pipe fits easily over the handle of the clamp with just a few mallet taps. This makes it easy to tighten the clamps with your hand positioned well behind the bar.

Garry Goetschius
Prospect, Kentucky

Demagnetize Tools

I use a lot of magnetic bars for tool storage. They work great, but they also magnetize the tools. And when your screwdrivers start to pick up stray screws and nails around the shop, this can get a little annoying.

SOLDERING GUN SOLUTION. Luckily, demagnetizing tools is as easy as pulling the trigger on a soldering gun and passing the tool back and forth through the tips. Just take care not to touch the hot tips with your fingers.

Wayne Mailhiot
Prescott, Arizona

Quick Tips

SEAL THE SLOT

To make dust collection more efficient, *John Cusimano* of Lansdale, Pennsylvania, seals the slot in the front of his table saw with a large sheet magnet.

MAGNETIC TASK LIGHT

Bill Wells from Olympia, Washington, creates a tiny task light by securing a small metal flashlight to tools with a pair of ¼"-dia. rare-earth magnets.

WIN THIS PORTER CABLE COMBO ROUTER

Simply send us your favorite shop tips. If your tip or technique is selected as the featured reader's tip, you'll win a *Porter Cable* combo router kit just like the one shown here. To submit your tip or technique, just go online to *Woodsmith.com* and click on the link, "SUBMIT A TIP." You can submit your tip and upload your photos for consideration.

The Winner!

Congratulations to John Oldenburg, the winner of this Porter Cable router. To find out how you can win this router kit, check out the information on the left.

finding the Best Glue For The Job

Choosing the right glue can be the difference between long-term success or failure when it comes to assembling a project.

Modern woodworkers are spoiled for choices when it comes to selecting what kind of glue to use on a project. No matter what the application, there's an adhesive that will get the job done. It's all a matter of knowing which one to use in each situation. Here's a quick look at six of the more useful glues you should have in your shop.

For most basic woodworking tasks, PVA glue is the right choice.

PVA GLUE. Polyvinyl acetate (PVA) is the go-to glue for most woodworking applications. This familiar yellow adhesive is the first choice for any project that's going to stay indoors.

The great thing about this type of glue is the array of different options for specific uses. You can now find water-resistant formulas as well as ones that offer long open times (the time you have to assemble the parts before the glue starts to set up). Another big plus is the availability of PVA — you can find it in any hardware store or home center.

Polyurethane glue foams as it cures, but provides a waterproof bond.

POLYURETHANE. The next glue on my list is polyurethane. You're probably familiar with this glue. It's notable for its foamy squeezeout at the glue line (photo above). Polyurethane is perfect for projects that will be in contact with moisture. It's waterproof and plenty strong.

There are a couple of things to keep in mind when using polyurethane. First, it bonds best when you dampen one of the

▲ Liquid hide glue can be used for most woodworking applications. It dries hard, but can be reversed with water or heat.

▲ A small dollop of epoxy in the hole bonds the barrel hinge to the wood for this small box project.

parts being joined. The glue needs moisture to set up and cure properly. Second, don't try to scrape or wipe away the foam when it's wet. It's much easier to let it dry and then scrape it off.

HIDE GLUE. Another glue I like is liquid hide glue. Of course, hide glue has been around for nearly as long as people have been working wood. But newer, bottled varieties are easier to use.

The advantages of hide glue are many — a long open time, easy cleanup, and a hard, non-elastic finish when dry. Many of us here at *Woodsmith* find ourselves reaching for hide glue more and more. It's a good choice for just about any indoor project.

EPOXY. One type of glue I'm never without is epoxy. It's perfect for gluing dissimilar materials, like wood and metal (right photo above). Most epoxies are sold in packs containing two parts — a resin and a hardener.

When mixed in the proper proportions, the two turn into a thick gel that will bond nearly anything. The margin photo at right shows an inexpensive scale that can help you keep the proportions right. You'd be surprised how the bond can be compromised by deviations in the mix.

On top of its strong bond, epoxy is great for filling gaps. In fact, I like to use it for filling knots. Finally, it's the perfect solution for gluing up oily woods like cocobolo and teak. It will reliably bond them when other glues fail.

CYANOACRYLATE. Next up is cyanoacrylate, also known as CA or super glue. While very useful, it's also the most expensive common glue. Like epoxy, it's great for gluing up dissimilar materials. But its main attraction is its instant bond. A drop of glue on anything (including your fingers) and you have a very fast-setting bond. The photo below shows a handy application.

▲ An inexpensive, but accurate scale takes the guesswork out of mixing any type of epoxy.

Cyanoacrylate can be found in thin, medium, and thick viscosities, useful in different situations. You'll want to consider using an accelerator if you want the quickest bond. And no matter what type you use, make sure to have a bottle of debonder on hand for the inevitable, accidental glueup.

COLD PRESS VENEER GLUE. When it comes to veneering a project, finding the right glue has always been a challenge. So I was happy to find a glue that takes the guesswork out of most veneer jobs. Cold press veneer glue makes it easy to glue up any paper-backed veneer. As you can see in the main photo on the opposite page, it spreads and works like PVA glue, so there's no learning curve. Just add cauls and clamps.

These six glues can handle just about any woodworking application. Give them a try and see what works best for you. W

▲ A drop of cyanoacrylate will temporarily bond a metal hinge to a wood frame while you scribe the outline with a marking knife.

a drill press for Woodworking

Woodsmith GO ONLINE EXTRAS
For plans to build this drill press table, visit our website at Woodsmith.com.

Turn your drill press into a precision woodworking tool with the addition of just a few simple shop-built accessories.

Though it's a tool originally designed for drilling metal, the drill press has found a home in most woodworking shops. But on its own, even today's drill presses don't offer much beyond their original, metal-drilling counterparts. Sure, they're great at drilling holes, but they do little in terms of helping with accuracy, repeatability, or speed.

EASY ADDITIONS. Fortunately, it doesn't take much to upgrade your drill press to be more efficient for woodworking tasks. Whether it's precisely positioned holes, easily repeatable operations, or holes drilled in difficult-to-reach locations, it's a simple matter to accessorize your drill press to suit the job at hand. Plus, most of these accessories can be made with a few pieces of scrap stock and common hardware. Here are my top recommendations for getting more from your drill press.

TABLE & FENCE. The best way to upgrade the table on most drill presses is with a basic auxiliary table and fence like you see above. The table supports larger workpieces, and it also backs up the hole to prevent damage. The fence aligns the workpiece with the bit for drilling accurately. Clamp a stop block to the fence, and you can drill multiple holes at the same location quickly.

The table and fence don't have to be complicated or expensive, either. I've been using the one shown above for years. Both the table and fence are plywood with hardboard glued to the top to create smooth faces. Two T-slots in the top let you adjust the fence easily, and a center hardboard insert

▼ Use a dowel and a scrap of pegboard to drill precisely indexed shelf pin holes.

▲ This right-angle support makes it easy to drill holes in the end of a workpiece or the edge of a panel. Swing the drill press table to align the workpiece with the bit.

▲ Cut a ¾"-deep V-groove in the face of a 2x4 scrap, and you'll have the perfect holder when drilling holes in dowels, round table legs, or pipes.

is replaceable when it gets chewed up. You'll find plans for the table and fence on our website.

INDEXING JIG. I drill a lot of shelf pin holes for projects, and getting these laid out precisely can be a challenge. But a simple indexing jig added to the drill press fence can make quick work of that. In fact, for holes laid out in 1" intervals, a scrap of pegboard makes a great indexing jig (lower photo, opposite page). After setting up the jig and drilling the first hole, move the ¼" dowel to the next hole, butt the workpiece against it, and drill. Repeat the process for as many shelf pin holes as needed.

RIGHT-ANGLE ATTACHMENT. Every so often, a project will call for a hole to be drilled in the end of a piece or the edge of a panel. You can use a hand-held drill for this, but the results are often less than precise.

There's a better method, though: Simply add a right-angle support to the edge of the drill press table, like the one shown above. Then, you can swing the table to bring your workpiece into alignment with the bit.

The right-angle support is easy to make. As you can see above, it's nothing more than an L-shaped plywood assembly with a couple of angled braces to support the fence. A cleat screwed to the front of the fence helps keep the workpiece square with the drill bit.

V-GROOVE BLOCK. The last accessory on my "favorites" list might be the easiest one of all to make, but it gets a surprising amount of use in my shop. Anytime you need to drill a hole in something round like a turned table leg or a dowel, there's really no good way to secure the workpiece as you drill the hole. But simply cutting a V-groove down the center of a 2x4 scrap takes care of that (photo above).

Needless to say, all of these accessories stay close to my drill press when I'm working in the shop. The hours of time they've saved me have more than made up for the small amount of work that it took to make them. W

Sanding Table

Another way to get more value from your drill press is to use it for a different woodworking operation altogether: sanding. By purchasing spindle sanding drums that are designed for your drill press, you can turn the drill press into a go-to tool for smoothing out the edges of curved parts (main photo, right).

These drums work great, but I do have a couple of suggestions for getting the most from them. First, it's important to fully "seat" the drum to get good results sanding. To do this, I just make a plywood table with a hole in the center slightly larger than the diameter of the sanding drum (inset photo). Then lock the drill press quill in position to begin sanding. Also, you'll want to clean the drum periodically with a crepe rubber block to keep it working its best (see the right side of the main photo).

▲ Your drill press can do a lot more than just make holes. Outfit it with a spindle sanding drum attachment and an auxiliary table (inset) to smooth the edges of curved workpieces.

Magswitch Workholding System

From ripping to resawing, this accessory system is sure to come in handy thanks to its innovative method of attaching to your tools.

The *Magswitch* system starter kit comes with two magnets, a base, and a featherboard.

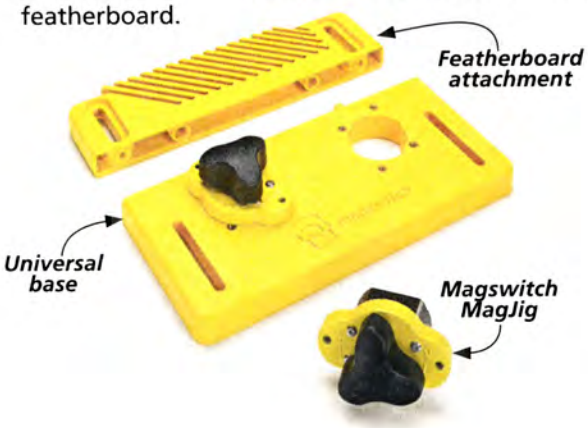

There's no question that fixtures like featherboards, stop blocks, and auxiliary fences can make woodworking safer and more accurate. But one drawback to these accessories is that it's often difficult to position them properly. If you want to secure a featherboard in the middle of a saw table, for example, you're going to need a large base or a long clamp.

WORKHOLDING SYSTEM. Recently, an Australian company called *Magswitch* devised an innovative solution to this problem. It created the *Workholding System*, a series of jigs and fixtures that use "switchable magnets" for a rock-solid attachment. So as long as you're working on a tool with a steel or cast iron table, you can position the fixture wherever you need it.

MAGNET ANATOMY. The heart of the *Workholding System* is the switchable magnets themselves, which are called *MagJigs*. You can get a concept of how they work above. Inside each magnet housing rests two powerful rare-earth magnets. In the "off" position, the poles of the magnets are aligned opposite one another, and you can move the *MagJig* around freely. But when you turn the knob 180° to the "on" position,

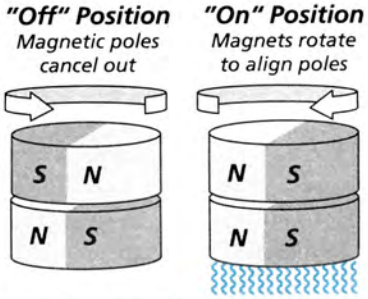

the poles of the magnets come into alignment, creating a powerful attractive force.

BASE & FEATHERBOARD. For their *Workholding System*, *Magswitch* added two *MagJigs* to an impact-resistant plastic base. This universal base is sold in a starter kit along with a featherboard (lower photo, opposite page). Two pins on the front edge of the base slip into mating holes on the featherboard. Then, as you can see in the photo at right, the featherboard locks in place anywhere on a table by switching on the magnets.

THIN STOCK JIG. *Magswitch* makes other accessories that lock into the base piece to assist with a variety of different woodworking tasks. One that I found very useful is the *Thin Stock Jig* shown in the main photo on the opposite page.

Usually, ripping thin strips on the table saw involves setting the rip fence very close to the blade, and using a push block to feed the workpiece through. With this jig, however, you can set a stop on the other side of the blade (well in front of the blade), butt a wider board against it, and set the rip fence. A roller at the front of the jig helps the stock move safely through the blade. Plus, the jig has presets for ripping strips to a variety of common thicknesses.

UNIVERSAL TRACK. A fence with built-in T-slots is always useful, and the *Universal Track* from *Magswitch* is no exception (left photo below). But the addition of the switchable magnets makes this fence even more versatile. Now, instead of relying on the reach of your clamps or other hardware to install the fence, you can place it anywhere on the table and switch on the magnets to lock it in place.

I found that the *Universal Track* made a great drill press fence, as it's easy to adjust and move on the table. I added a wood stop block to the fence to make it easier to drill repeatable holes.

RESAW GUIDE ATTACHMENT. Another *Magswitch* accessory that's earned a place in my shop is the *Resaw Guide Attachment* shown in the lower right photo. When you resaw lumber at the band saw, the blade can have a tendency to drift. As a result, it's best to use a resaw guide with a single point that lets you pivot the wood slightly as you cut it.

The only problem with this is that it's often difficult to position a resaw guide out in the field of a band saw table without some method of securing it. Of course, having magnets on the base of this guide takes care of that. This resaw guide has some other great features as well, such as tapered faces that make pivoting the board easy and a series of rollers that allow the workpiece to move through the blade smoothly.

All in all, I'd say the *Magswitch Workholding System* is worth a closer look for your shop. The switchable magnets on their own are a great technology, and *Magswitch* has done a good job coming up with accessories for the system that are truly useful for woodworking. You can find sources for all the items shown here on page 51. W

▲ A magnetic featherboard can be placed anywhere on the saw table for safer rip cuts.

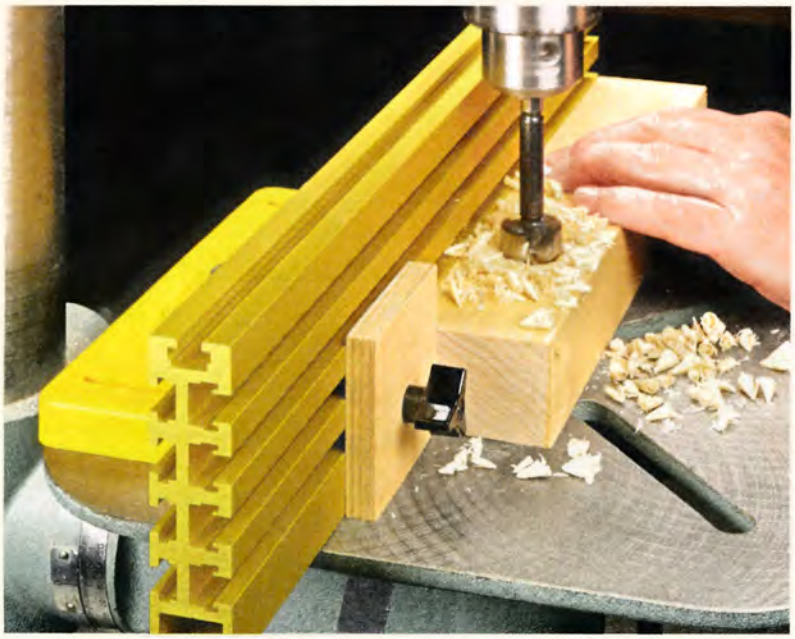

▲ This anodized aluminum fence features four T-slots and attaches to the magnetic base. The ease with which you can move and lock it down makes it a great drill press fence.

▲ The *Magswitch Resaw Guide*'s single-point fence relies on four bearings to help the workpiece slide smoothly through the blade.

Oak Nightstand

With its frame and panel sides and elegant moldings, this nightstand looks good enough that you might consider making two of them.

An heirloom-quality appearance from furniture that's secretly easy to build: That's the theme for this suite of oak bedroom furniture (photo, opposite page). It started with an elegant dresser in issue 206, and continued with a queen-size bed frame in issue 207.

This great-looking nightstand is certainly no exception to the rule. On the outside, it looks like each side of the nightstand is put together with meticulous frame and panel construction. But in reality, it's just a basic plywood box. A series of rails, stiles, and molding pieces are applied to the case to give it the look of fine furniture. The result is an heirloom-quality nightstand, without all the work that typically goes into a piece of furniture like this.

If you've already built the dresser for this bedroom suite, then the construction of this nightstand will come as no surprise. Many of the construction details and techniques throughout are similar. Of course, even if you haven't built the dresser, you'll still find this nightstand to be a fun woodworking challenge with a very rewarding payoff.

CONSTRUCTION DETAILS

OVERALL DIMENSIONS:
19¾"D x 24⅝"W x 24"H

Plywood top panel is wrapped with solid-wood edging

NOTE: *Case is constructed with simple rabbet and dado joints*

Kicker is glued to back of drawer

Hole in back allows cords to pass through

NOTE: *Drawers are assembled with sliding dovetail joints*

Drawers slide on rabbeted wood guides

Front edging conceals plywood

Plywood drawer fronts are wrapped with solid-wood molding

Trim pieces create visual divide between upper and lower sections of case

Base brace adds strength to base assembly

NOTE: *Solid-wood framing and decorative moldings are applied over easy-to-build plywood case*

Cleats reinforce base

Traditional segmented glue blocks reinforce mitered corners of base

NOTE: *For sources of supplies and finishing information, see page 51*

NOTE: *Mitered base is built separately and then attached to case with screws*

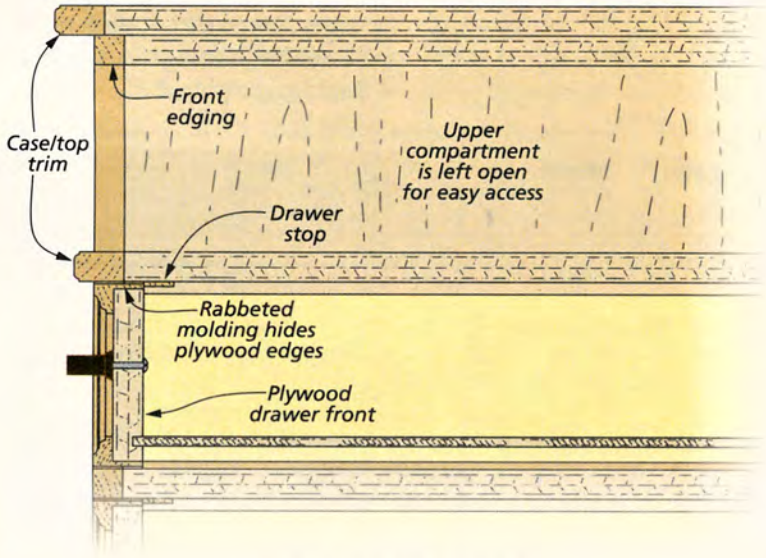

SIDE SECTION VIEW

▲ Plans for the dresser and bed projects of this bedroom suite can be found at WoodsmithPlans.com. The mirror plan will be in an upcoming issue.

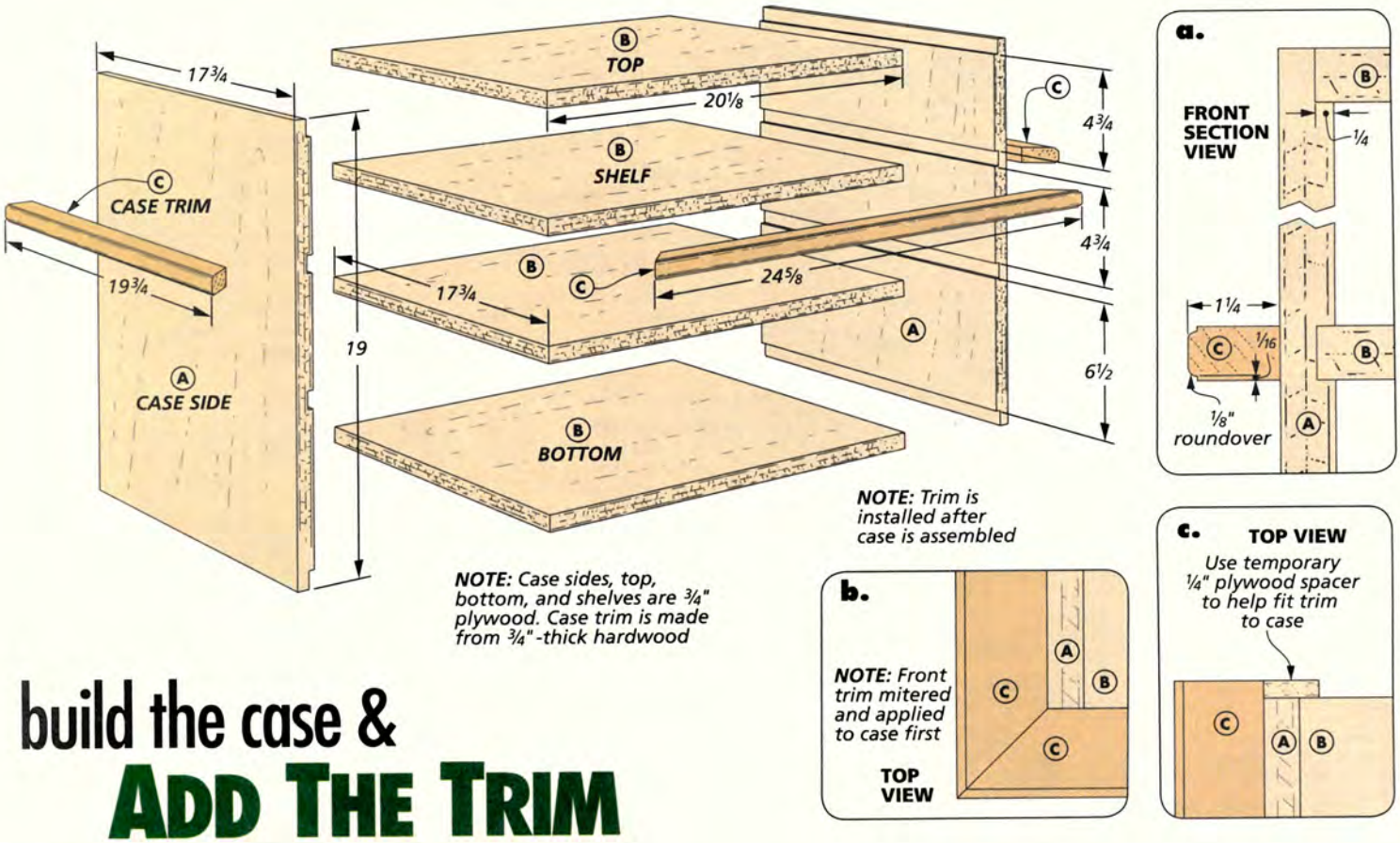

build the case & ADD THE TRIM

The first step in building this oak nightstand is to construct the basic plywood case. As you can see in the drawing above, it consists of two side panels, as well as a top, bottom, and two shelves that are all the same size.

To make the case, you simply start by cutting a series of dadoes and rabbets in the sides to match the full thickness of the plywood (see the left and center drawings below). This simplifies construction, as no mating joinery is needed on the top, bottom, or shelves. In fact, once this series of dadoes and rabbets is cut, you can glue and clamp the case together.

CASE TRIM. The front edge of the upper shelf and the sides of the case are wrapped with trim. These hardwood pieces are mitered at the corners and glued and clamped to the case. But first, you'll want to rout a subtle rounded profile with a small fillet on the front edges of some longer blanks (detail 'a'). The right drawing below shows you how this is done.

After that, it's just a matter of mitering the trim pieces to length, starting with the front piece (detail 'b'). You'll have to account for the back panel when adding the side trim pieces, so tack on a spacer before cutting those pieces to final length (detail 'c').

How-To: Make the Case & Add the Trim

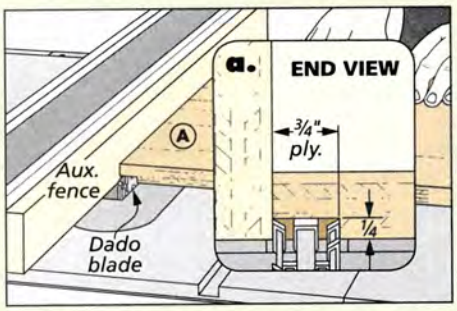

Rabbets. *Set the dado blade to match the thickness of the plywood and use an auxiliary rip fence to cut the rabbets.*

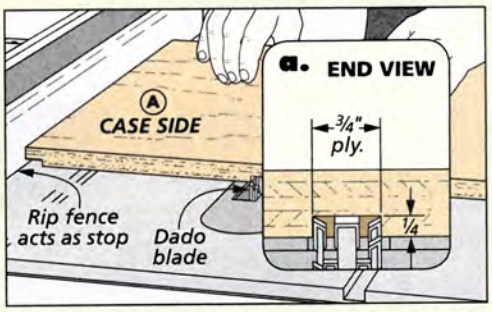

Dadoes. *Cut each pair of dadoes using the same rip fence setting. Make sure each one is cut to full depth.*

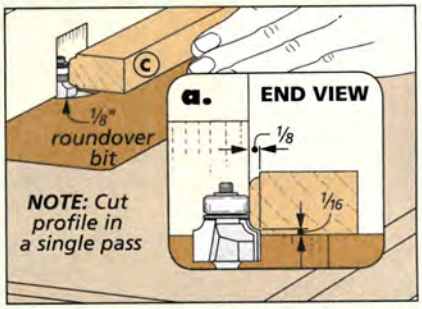

Simple Profile. *Rout a roundover with a 1/16" fillet on both outside edges of the blank for the case trim.*

FRAMES. Now you can start adding the pieces that really give the nightstand its fine furniture look — the frames and the moldings. As you can see at right, the frames consist of a series of rails and stiles made of hardwood that are simply trimmed to size and then glued and clamped to the case sides.

I started by making the side frames. First, I cut the stiles to their final width and length and glued and clamped them to the case sides (details 'd' and 'e'). At that point, I measured between the stiles and cut the rails to fit between them. Note that the lower rail on each side is a little wider than the three rails above it. All of those rails are glued on next (see detail 'c').

SIDE MOLDING. The detailed appearance of the case sides is completed with molding that wraps the insides of the frames. The molding has a decorative profile that can be routed on a wider blank as shown in the left drawing below. Then rip the molding strips to width (center drawing). Installing them is just a matter of careful measuring and mitering, followed by gluing and nailing them in place with a pin nailer.

FRONT STILES. Covering up the front of the case is the next order of business. Here, you'll add four hardwood stiles: two upper ones and two lower ones. You can start by cutting some extra-long blanks to width for the stiles. Then rout a bead on the edges using the router table technique shown in the lower right drawing. Cut the stiles to their final length, and glue and clamp them in place, as shown in detail 'b' at right.

FRONT EDGING. All that's left now are three front edging pieces. These are cut to fit between the front stiles, and they cover the exposed front edges of the plywood case. There's nothing too complicated here. Just trim the boards to match the thickness of the plywood, cut them to length, and then glue them in place to complete this portion of the nightstand (detail 'a').

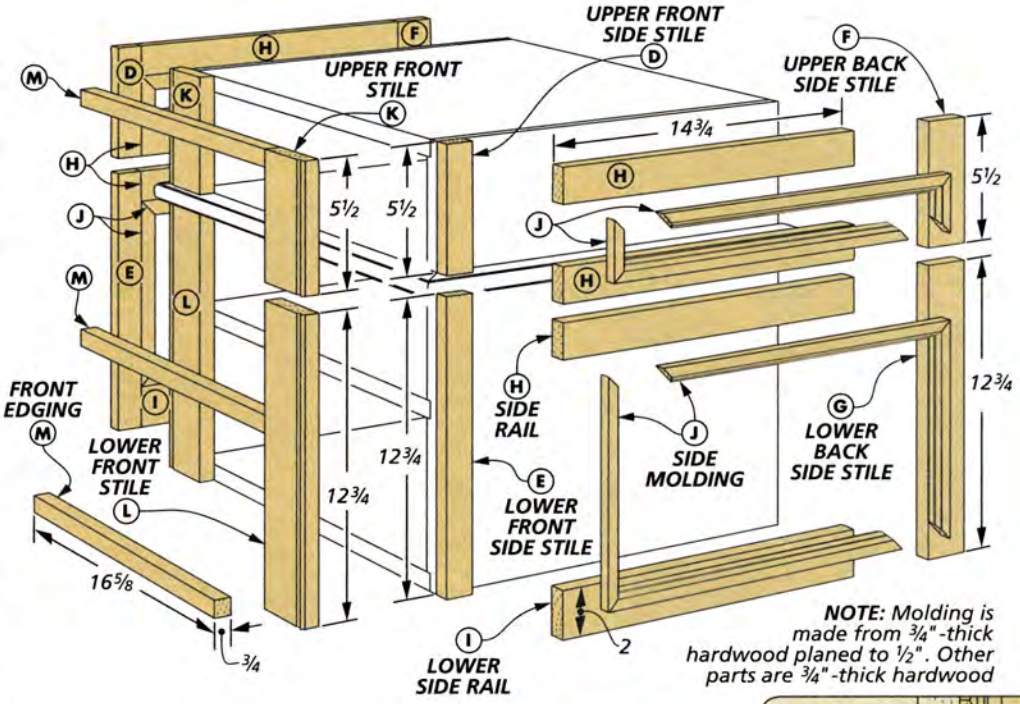

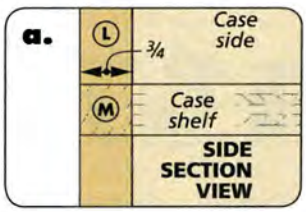

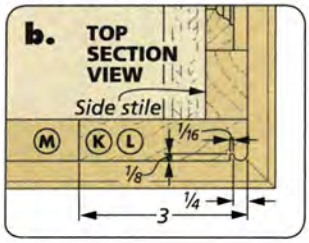

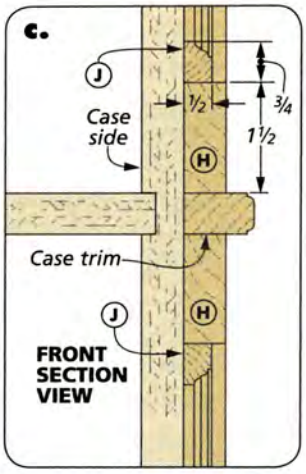

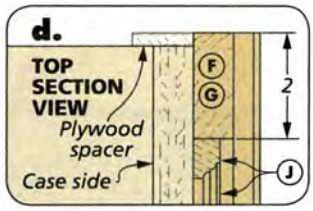

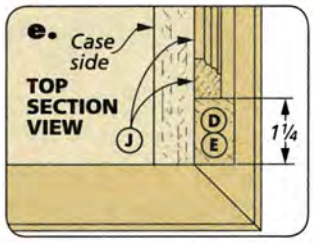

Side Molding & Front Stiles

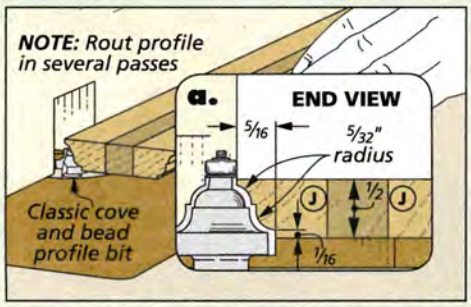

Router Table. *After setting the fence and bit height, rout the profile along both edges of a wide blank.*

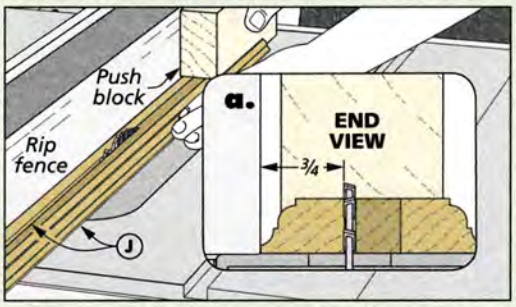

Table Saw. *Now you can rip the molding to final width at the table saw. Be sure to use a push block to complete the cuts.*

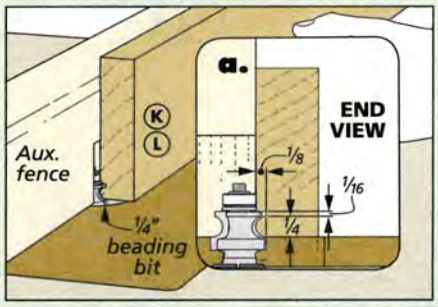

Bead. *Before routing the bead profile on the front stiles, use test cuts to zero in on the proper bit height.*

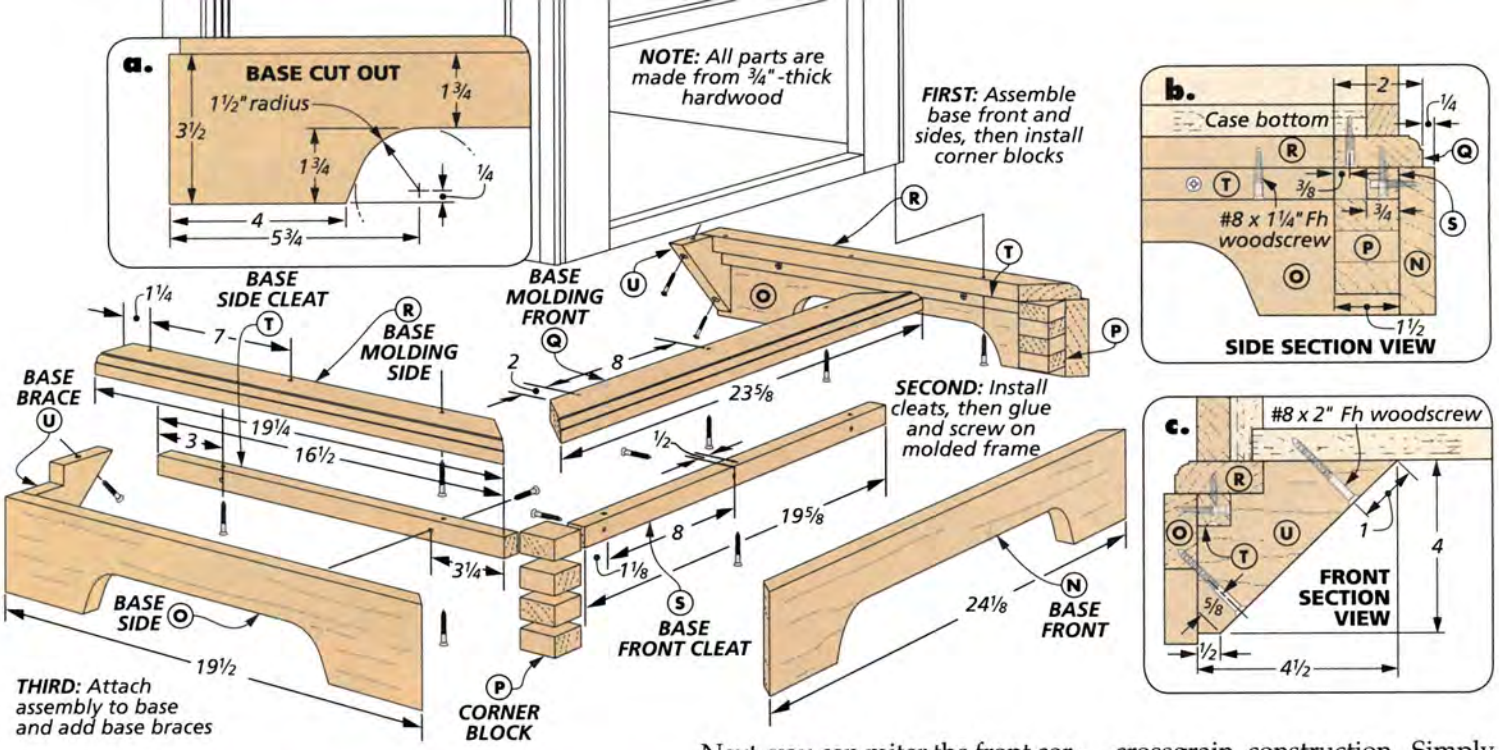

add a BASE & TOP

The plain plywood case has definitely taken on a new look. Adding a base, a top, and a back will complete the transformation.

THE BASE. The base is made up of two mitered frames — a taller base frame and a ¾"-thick molded frame (drawing above). The more involved base frame comes first.

The box below shows the details on the base frame construction. You start by cutting the pieces to width and rough length. Next, you can miter the front corners of the frame and then crosscut the side pieces to final length.

CUTOUTS. The base front and sides all have cutouts that form "feet" at the corners. The profile of the cutouts is not complex (detail 'a'). The How-To box below guides you through the procedure I used.

At this stage, the miter joints can be glued up. I fit a spacer between the sides at the back and used a pair of band clamps to pull the joints together. Make sure the frame is square.

CORNER BLOCKS. The miter joints are reinforced with corner blocks (detail 'b'). Here, I drew upon a traditional technique designed to avoid problems caused by crossgrain construction. Simply cut four blocks for each corner, and glue them in place, alternating the grain direction between each block as you glue them in.

CLEATS. With the base frame complete, you can now add three cleats for reinforcement. After cutting them to size, predrill pilot holes for screws. Then use screws to attach the cleats to the base frame, flush with the top edges of the frame.

BASE MOLDING. The three base molding pieces go on next. To make them, I first cut three extra-long blanks to width and took them to the router table to rout the profile (lower left drawing, opposite page). With this task

How-To: Base Frame

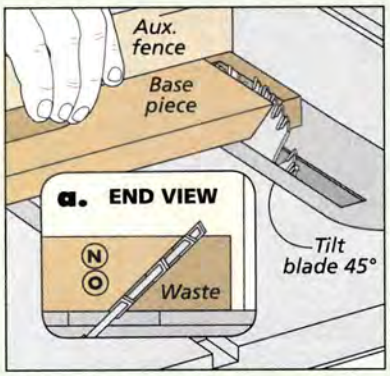

Miters First. *Before crosscutting the side pieces to length, miter the front corners of the base.*

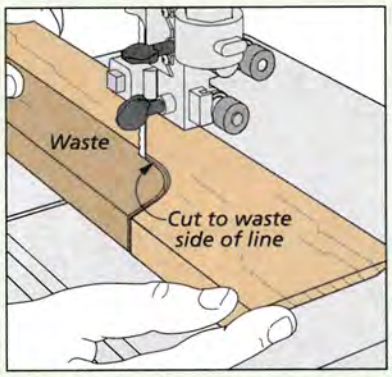

Band Saw. *After laying out the base profiles, remove the waste, staying close to the layout line.*

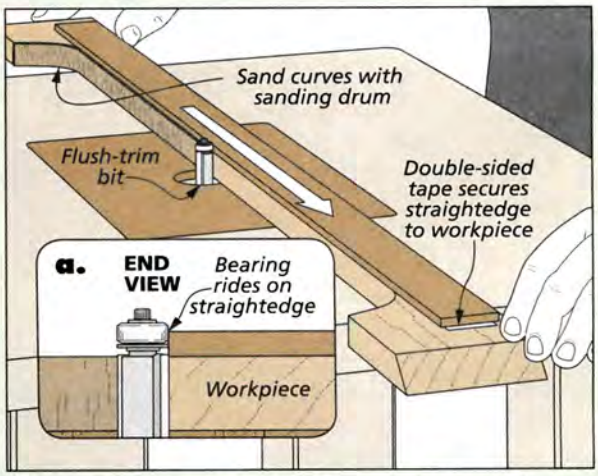

Flush Trim. *The straight sections of the profile can be smoothed with an attached straightedge and a flush-trim bit at the router table.*

complete, you can cut the miters and crosscut the sides to final length. Countersunk screw holes are drilled in these parts in order to attach the base to the case.

It's time to attach the base molding parts above the base frame and cleats with glue and clamps. Secure the assembly by driving screws through the cleats and into the base molding.

BRACES. The base also needs a pair of braces at the back. But before making and installing these pieces, I fastened the base to the case. You'll have to flip the case upside-down to install the screws (detail 'b,' opposite page).

Take a look at the illustrations below to see how I made the notched braces. When they're ready to go, they can be installed with glue and screws flush with the back edge of the case bottom.

TOP. Turn the case back upright, and you're ready to add the top — a much less involved job. The top is a plywood panel wrapped on all four sides with solid-wood trim (main drawing above). So your first step is to cut a ¾"-plywood panel to size.

TRIM. With the panel in hand, I cut blanks for the trim pieces to width and rough length. The trim is mitered at the front corners, while the back piece simply fits between the side pieces. The back piece should be cut and installed first. It fits flush at both ends of the panel and flush with both surfaces. Now, you can miter and crosscut the front and sides to fit — first the front piece and then the two sides.

PROFILE. Once all the trim pieces were in place, I took the top to the router table to add a roundover profile. It's identical to that used on the case trim (detail 'a'). A single pass along both edges of the front and sides is all it takes. Finally, the top can be attached with glue alone.

BACK. With the base and top both fastened in place, you can close up the back of the case. All you need to do is cut the ¼"-plywood panel to size. The details above show how it should fit. To allow cords to pass through, drill a hole as shown above. Then glue and tack the back to the sides and dividers.

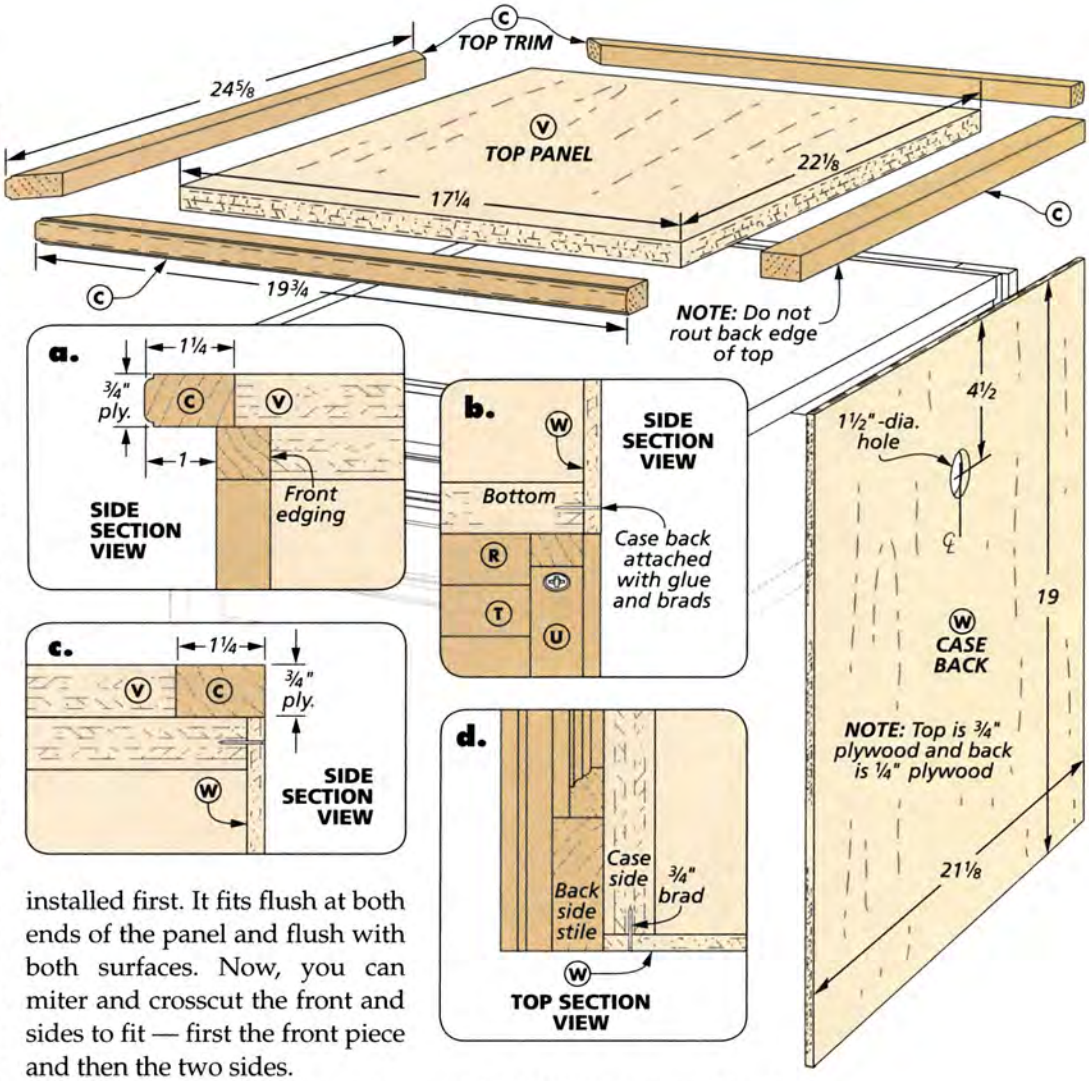

Molded Frame & Base Braces

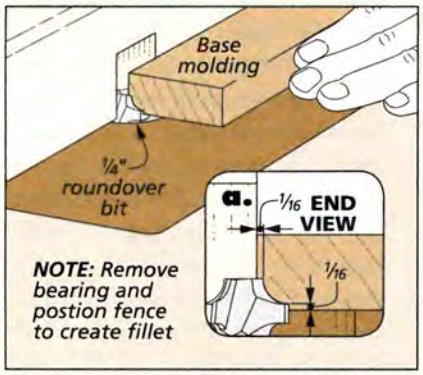

Roundover with Fillets. *The simple profile on the molded frame pieces can be cut in a single pass.*

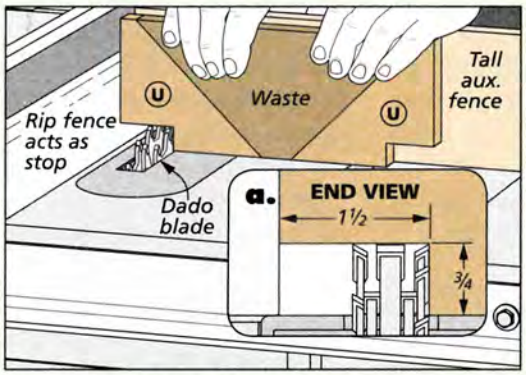

Notches First. *After cutting an extra-long brace blank to size, I switched to a wide dado blade to cut a notch at each end.*

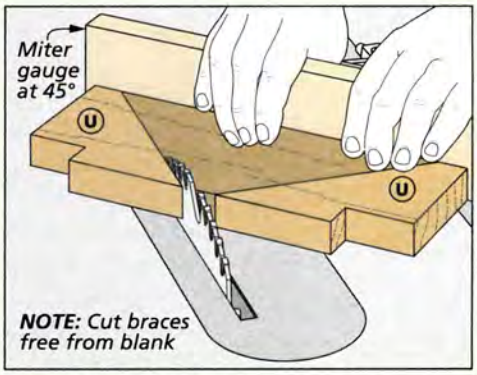

Bevel Cuts. *To complete the base braces, install a standard blade and set the miter gauge to 45° before making the cuts.*

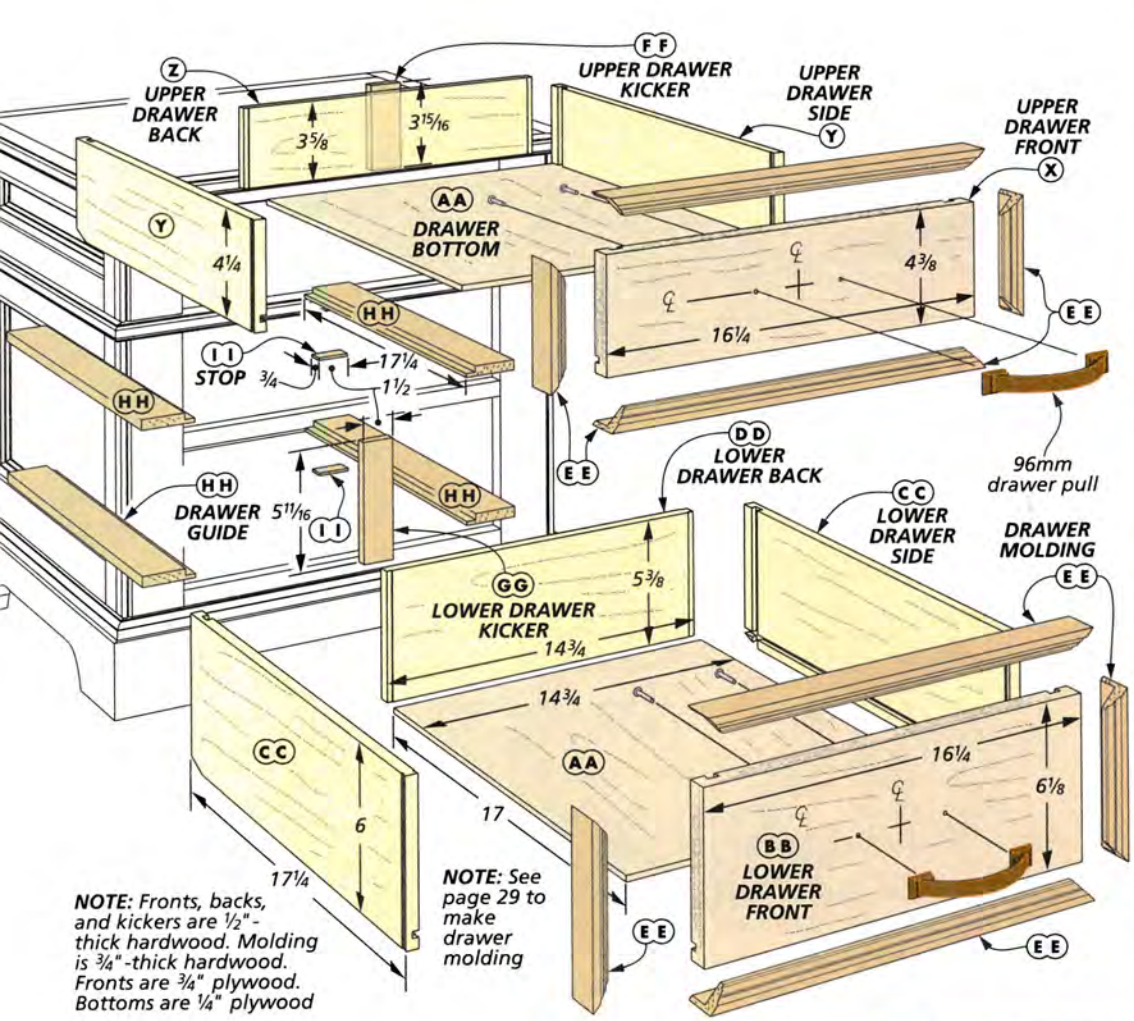

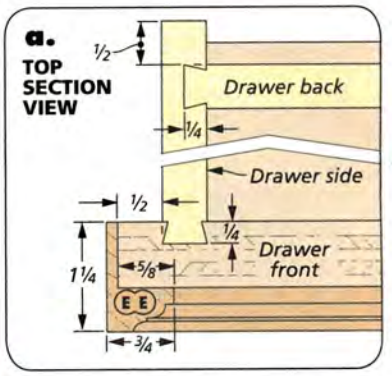

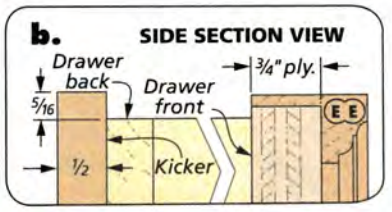

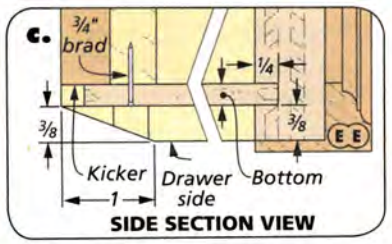

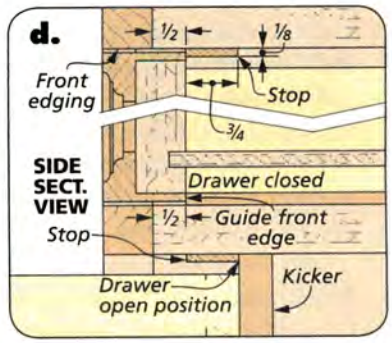

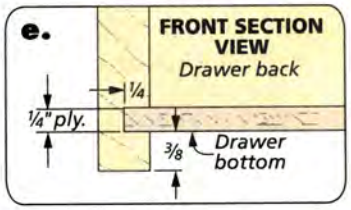

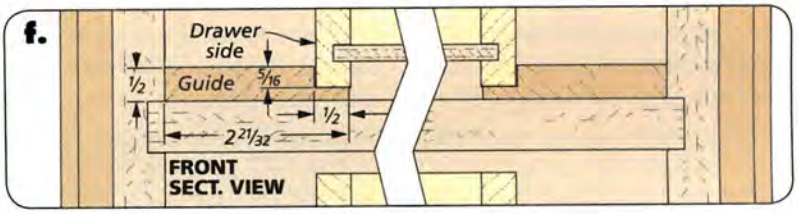

put in the DRAWERS

All that remains to complete the nightstand is to build a couple of drawers. As you can see above, the design of the drawers follows that of the case. The fronts are cut from plywood and wrapped with molding. The result is a richly detailed look. The drawers are built with unique joinery: sliding dovetails.

FRONTS. I started by cutting the fronts to size. The drawer molding will add 1/8" on all four sides. Plus, the design allows for a 1/16" final gap. So I cut the fronts 3/8" less than the size of the openings in each dimension.

SIDES & BACKS. Next, I cut all the sides and backs to finished size. Note that the backs are narrower than the sides. This creates a gap that allows you to install the bottom later (detail 'c').

JOINERY. The How-To box on the opposite page picks up the story from here. It will walk you through the process of cutting the joinery, and then cutting a groove in the drawer front and sides to accept the bottom. Finally, you'll cut a slight bevel on the sides to allow the drawers to be tipped into place (Figure 4).

ASSEMBLY. Now the drawer boxes are ready for glueup. Just make sure the bottom edges of the sides and front are flush, and the bottom edge of the back is flush with the top of the grooves (details 'b' and 'c').

DRAWER MOLDING. After installing the bottoms, you can complete the major work by making and applying the molding to the fronts. As shown in details 'a' and 'd,' this molding wraps around the edges of the plywood. For more information on making the drawer molding, see Shop Notebook on page 29.

INSTALL THE MOLDING. Mitering the molding to fit just takes a little patience. Starting with a shorter

end piece, I worked my way around each front, mitering the corners and gluing and pinning each piece in order.

KICKERS. Since the tops of the drawer sides and backs sit below the fronts, I glued kickers to the backs to keep them from tipping when open. These pieces extend from the drawer bottom to 5/16" above the top edge of the backs (details 'b' and 'c,' opposite page).

GUIDES & STOPS. To make the drawers fully operational, you need to install guides and stops in the case. To make the guides, I cut blanks to size from 1/2"-thick stock and then cut the rabbets by making two passes across a standard blade. The dimensions you need are shown in detail 'f' on the facing page.

The guides are sized to fit tight against the case sides. However, if a drawer fits too loose or tight, the guides can be shimmed out or trimmed down.

With the guides glued in place, all you need to do is add thin stops to the case that align with the kickers (detail 'd'). Now you have a finish to apply, and then this nightstand is ready to move into place beside the bed. W

How-To: Drawer Construction

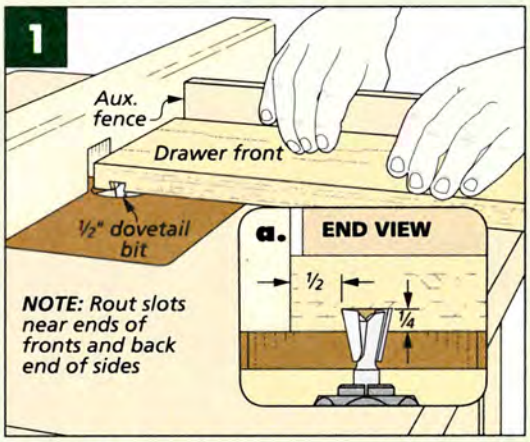

Dovetail Slots. *Once you've set the bit height and the fence position, cut each dovetail slot with a single, slow and steady pass over the bit.*

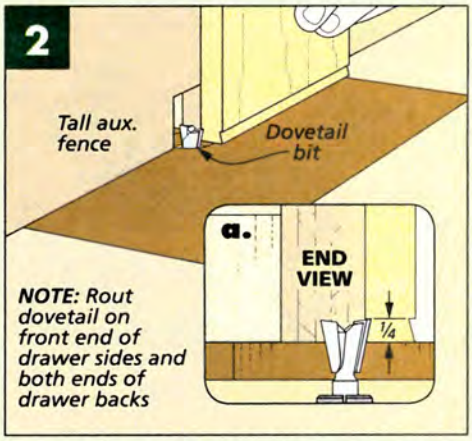

Dovetails. *Use a test piece to sneak up on the proper fence setting. You want a dovetail that slides easily into the socket.*

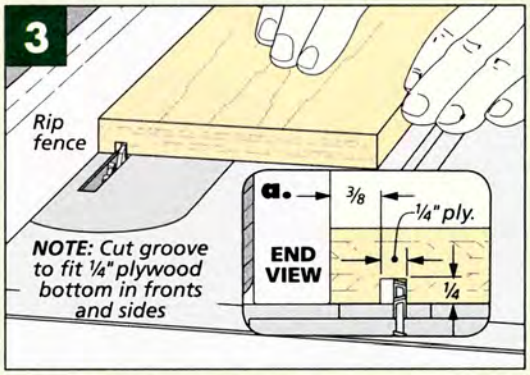

Bottom Grooves. *To cut grooves sized to the 1/4" plywood, make two passes across a standard blade adjusting the rip fence in between.*

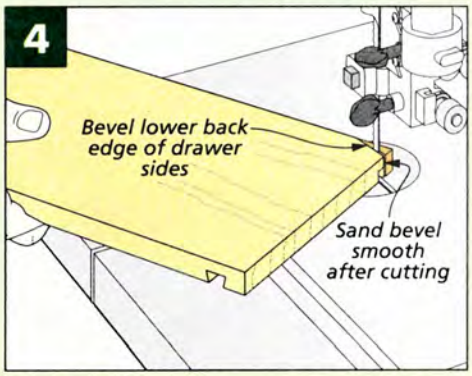

Bevels. *After laying out the bevels on the sides, remove the waste at the band saw, and sand or plane the cuts smooth.*

Materials, Supplies & Cutting Diagram

A	Case Sides (2)	3/4 ply. - 17 3/4 x 19
B	Top/Bottom/Shelves (4)	3/4 ply. - 17 3/4 x 20 1/8
C	Case/Top Trim (1)	3/4 x 1 1/4 - 155 rgh.
D	Upper Front Side Stiles (2)	3/4 x 1 1/4 - 5 1/2
E	Lower Front Side Stiles (2)	3/4 x 1 1/4 - 12 3/4
F	Upper Back Side Stiles (2)	3/4 x 2 - 5 1/2
G	Lower Back Side Stiles (2)	3/4 x 2 - 12 3/4
H	Side Rails (6)	3/4 x 1 1/2 - 14 3/4
I	Lower Side Rails (2)	3/4 x 2 - 14 3/4
J	Side Molding (1)	1/2 x 3/4 - 170 rgh.
K	Upper Front Stiles (2)	3/4 x 3 - 5 1/2
L	Lower Front Stiles (2)	3/4 x 3 - 12 3/4
M	Front Edging Strips (3)	3/4 x 3/4 - 16 5/8
N	Base Front (1)	3/4 x 3 1/2 - 24 1/8
O	Base Sides (2)	3/4 x 3 1/2 - 19 1/2
P	Corner Blocks (8)	3/4 x 1 1/2 - 1 1/2
Q	Base Molding Front (1)	3/4 x 2 - 23 5/8
R	Base Molding Sides (2)	3/4 x 2 - 19 1/4
S	Base Front Cleat (1)	3/4 x 3/4 - 19 5/8
T	Base Side Cleats (2)	3/4 x 3/4 - 16 1/2
U	Base Braces (2)	3/4 x 4 - 4 1/4
V	Top Panel (1)	3/4 ply. - 17 1/4 x 22 1/8
W	Case Back (1)	1/4 ply. - 21 1/8 x 19
X	Upper Dwr. Front (1)	3/4 ply. - 4 3/8 x 16 1/4
Y	Upper Drawer Sides (2)	1/2 x 4 1/4 - 17 1/4
Z	Upper Drawer Back (1)	1/2 x 3 5/8 - 14 3/4
AA	Drawer Bottoms (2)	1/4 ply. - 14 3/4 x 17
BB	Lower Dwr. Front (1)	3/4 ply. - 6 1/8 x 16 1/4
CC	Lower Drawer Sides (2)	1/2 x 6 - 17 1/4
DD	Lower Drawer Back (1)	1/2 x 5 3/8 - 14 3/4
EE	Drawer Molding (1)	3/4 x 1 1/4 - 95 rgh.
FF	Upper Drawer Kicker (1)	1/2 x 1 1/2 - 3 15/16
GG	Lower Drawer Kicker (1)	1/2 x 1 1/2 - 5 11/16
HH	Drawer Guides (4)	1/2 x 2 21/32 - 17 1/4
II	Drawer Stops (2)	1/8 x 3/4 - 1 1/2

- (2) 96mm Drawer Pulls w/Screws
- (4) #8 x 2" Fh Woodscrews
- (20) #8 x 1 1/4" Fh Woodscrews
- 3/4" Brads

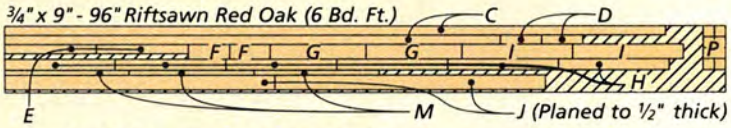

ALSO NEEDED: *One 48" x 96" Sheet of 3/4" Riftsawn Red Oak Plywood*
One 48" x 48" sheet of 1/4" Riftsawn Red Oak Plywood

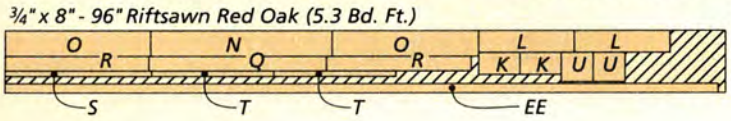

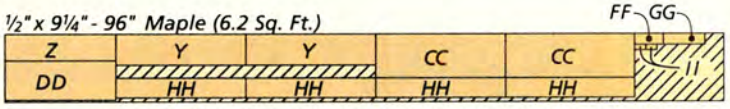

Dartboard Cabinet

This traditional cabinet is the perfect home for your dartboard. It's exactly the treatment this classic game deserves.

▲ The cabinet's frame and panel doors and detailed moldings make it an attractive addition to the game room.

Some of my favorite memories are of playing darts in an English pub. But trying to import that experience into an American setting can be a challenge. First, you need an authentic board. After that, a classic cabinet to house the board and scoreboard can lend your game room a bit of the authentic pub atmosphere.

The cabinet shown above fills the bill. And you can choose a wood that complements your other furniture, as well. (I used quartersawn white oak to match my Craftsman-style furniture.)

As for the woodworking, it couldn't be simpler. The basic cabinet relies on tongue and dado joinery, reinforced by the decorative corner brackets. The frame and panel doors are also pretty straightforward to build.

For the scoreboards, I used a chalkboard paint over hardboard. This works great and is much easier to cut and install than actual slate blackboards.

All in all, it's been a big hit here. Of course, everyone knows it's tough to beat a nice round of darts and a cold beverage.

CONSTRUCTION DETAILS

OVERALL DIMENSIONS: 7 3/16"D x 30"W x 30"H (Closed)
5"D x 60 1/2"W x 30"H (Open)

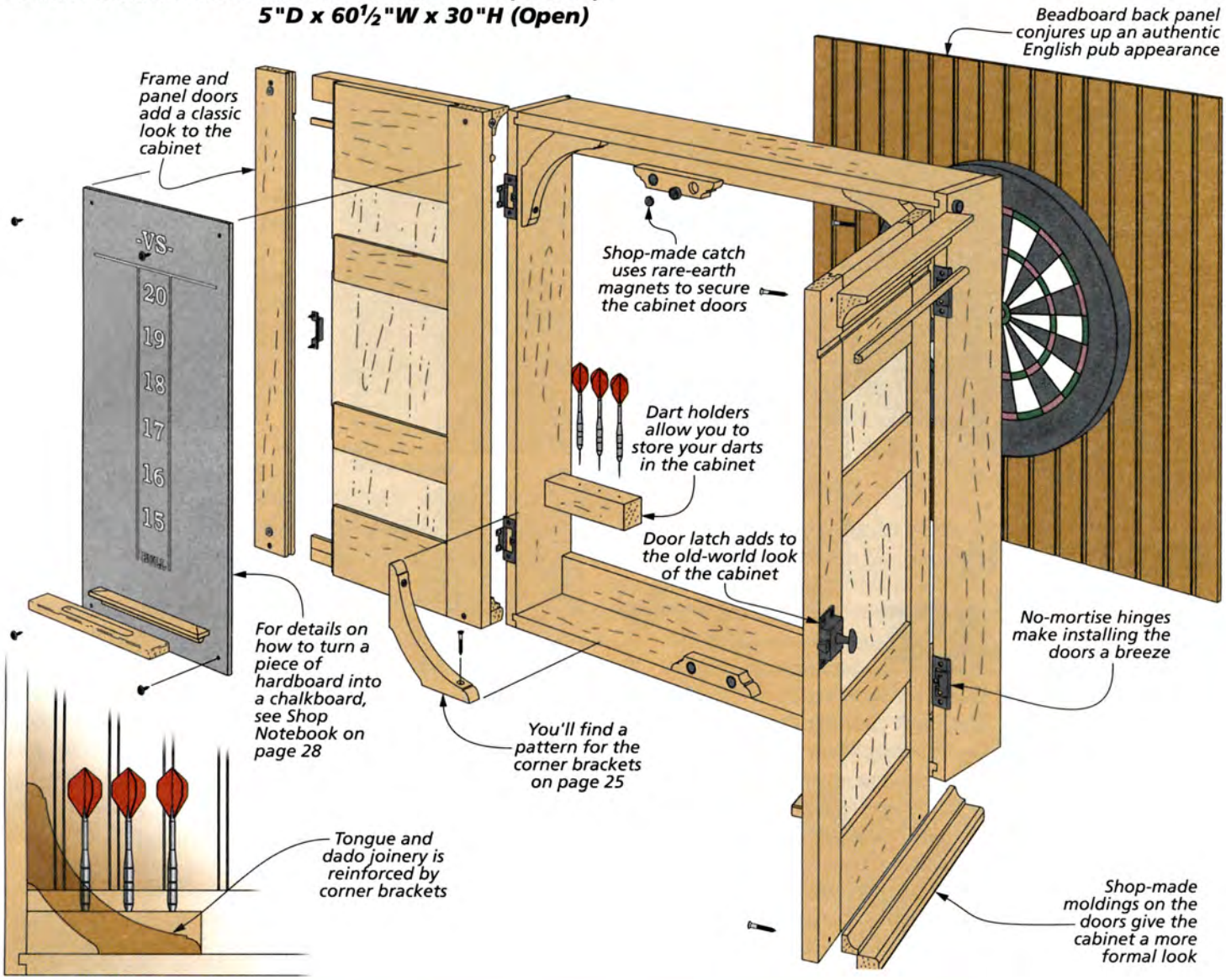

Materials, Supplies & Cutting Diagram

A Sides (2)	3/4 x 5 - 30	
B Top/Bottom (2)	3/4 x 4 5/8 - 29	
C Cleats (2)	3/4 x 2 1/4 - 28 1/2	
D Back (1)	3/8 bdbd. - 29 1/2 x 30	
E Corner Brackets (4)	3/4 x 6 - 6	
F Door Catch Blocks (2)	3/4 x 1 - 5 1/2	
G Dart Holders (2)	1 1/2 x 1 1/2 - 6	
H Mounting Plate (1)	1/4 ply. - 3 x 3	
I Stiles (4)	3/4 x 2 3/4 - 30	
J Top Rails (2)	3/4 x 5 3/4 - 10 1/4	
K Mid Rails (4)	3/4 x 2 3/4 - 10 1/4	
L Bottom Rails (2)	3/4 x 4 1/4 - 10 1/4	
M Top/Btm. Panels (4)	1/4 ply. - 10 3/16 x 4 3/16	
N Center Panels (2)	1/4 ply. - 10 3/16 x 8 3/16	
O Upper Cove Molding (2)	1 3/8 x 1 1/2 - 15	
P Bead Molding (2)	3/8 x 3/8 - 15	
Q Base Molding (2)	3/4 x 1 - 15	
R Cove Molding (1)	3/4 x 3/4 - 55 rgh.	
S Scoreboards (2)	1/4 hdbd. - 12 x 24	
T Chalk Trays (2)	1/2 x 1 1/4 - 10	

- (16) #8 x 1 1/4" Fh Woodscrews
- (20) #6 x 3/4" Fh Woodscrews
- (8) #6 Finish Washers
- (8) 1 1/4" Pocket Hole Screws
- (6) 1/2" Rare-Earth Magnets w/Cups
- (6) 5/8" Magnet Washers
- (2 pr.) No-Mortise Hinges w/Screws
- (1) Door Latch

3/4"x 6" - 96" Quartersawn White Oak (4.0 Bd. Ft.)

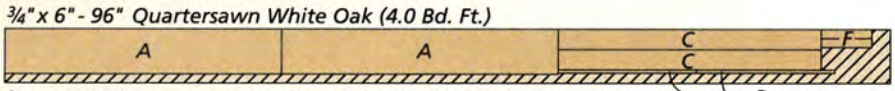

3/4"x 6" - 96" Quartersawn White Oak (4.0 Bd. Ft.)

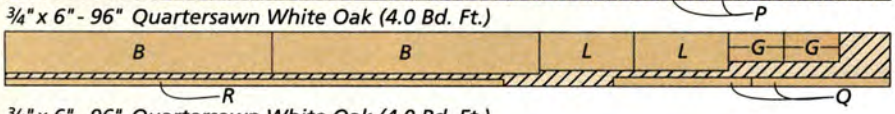

3/4"x 6" - 96" Quartersawn White Oak (4.0 Bd. Ft.)

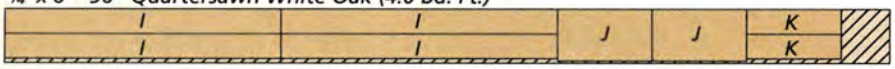

3/4"x 9" - 48" Quartersawn White Oak (2.0 Bd. Ft.)

ALSO NEEDED: *One 48"x 48" Sheet of 3/8" Yellow Pine Beadboard Paneling, One 24"x 24" Sheet of 1/4" Riftsawn White Oak Plywood, One 30" x 30" Sheet of 1/4" Hardboard*

making the CASE

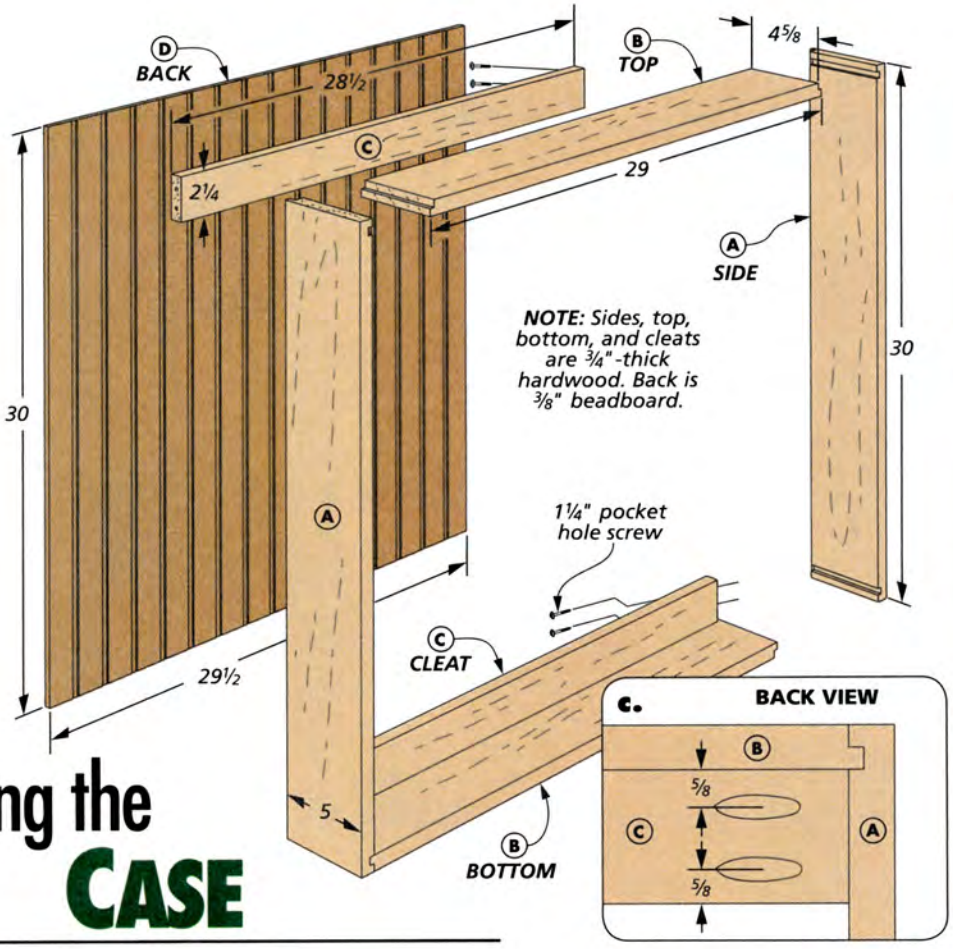

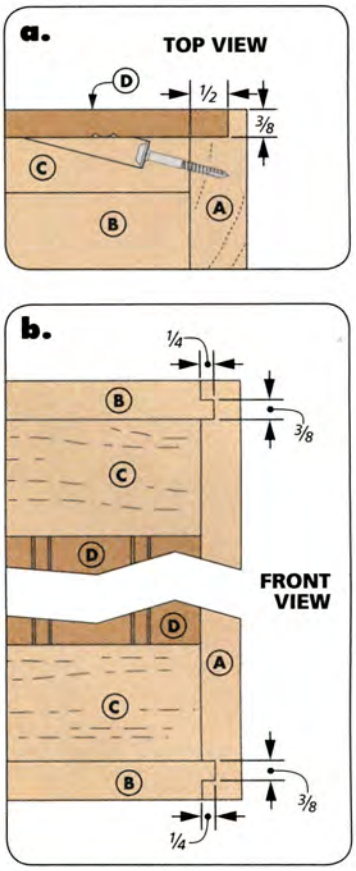

The basic case for the cabinet is pretty straightforward to build. The drawing above shows how I used tongue and dado joinery to connect the top and bottom to the sides. Cleats at the top and bottom of the case add strength to the joints. The addition of the beadboard back and corner brackets make the case rock-solid.

To round out the case, you'll add a pair of magnetic door catches and a couple of dart holders to keep your darts ready for competition.

SIDES. After cutting the sides to final size, the next step is to cut a pair of dadoes that will hold the tongues in each end of the top and bottom. The left drawing below shows how I used an auxiliary fence on the miter gauge to guide these cuts. In detail 'a,' above, you can see how the sides also need a rabbet on the rear edge to hold the back. To cut the rabbet, just install an auxiliary rip fence and bury part of the blade.

TOP & BOTTOM. Since the table saw is already set up to cut rabbets, now is the perfect time to cut the tongues on the case top and bottom. Here again, I used the auxiliary miter gauge fence to make the cuts. The center illustration below shows how it works. Start with the blade a bit low and sneak up on the cut. Test the tongue in the dado until it's a snug fit.

CLEATS. A pair of cleats help tie the case together. I used pocket hole joinery to secure the cleats.

How-To: Case Joinery

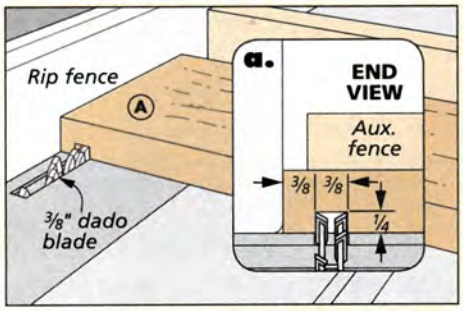

Dadoes. *With a dado blade installed and an auxiliary fence on the miter gauge, use the rip fence to locate the dadoes.*

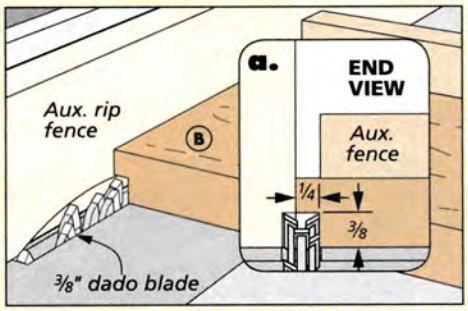

Tongues. *Bury the dado blade in an auxiliary rip fence to cut the tongues. Sneak up on a snug fit to the dadoes.*

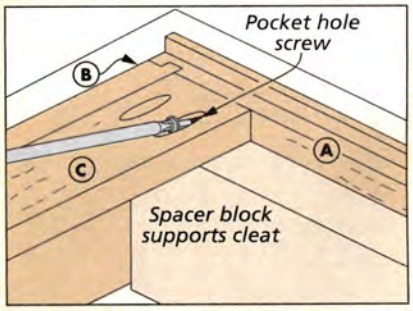

Cleats. *To hold the cleat in place while driving the screws, I cut a spacer block from a piece of scrap.*

The big advantage to this type of joint is that it pulls the sides together and traps the top and bottom in the dadoes. On top of that, it's easy to make using a pocket hole jig. The right drawing at the bottom of the opposite page also shows the spacer block I used to hold the cleat in position while I drove the screws.

BACK. Now you're ready to cut the beadboard back to fit. But before you make any cuts, take a minute to lay out the size and center the beadboard. This will give you a much nicer look in the finished cabinet. With that done, you can attach the back using a few screws for now. (You'll paint it later, before the final installation.)

CORNER BRACKETS. Four corner brackets strengthen the cabinet and add a pleasant decorative accent. The pattern at right provides all the details you need to make the brackets.

The important thing to keep in mind is the grain direction. The grain should run the length of the bracket. The drawings below show what I mean and walk you through the process of cutting and shaping the brackets.

Finish them up by drilling countersunk screw holes at the locations shown in the pattern. Now you can install the brackets with screws and glue. Once again, I placed a spacer block behind them while I drove the screws.

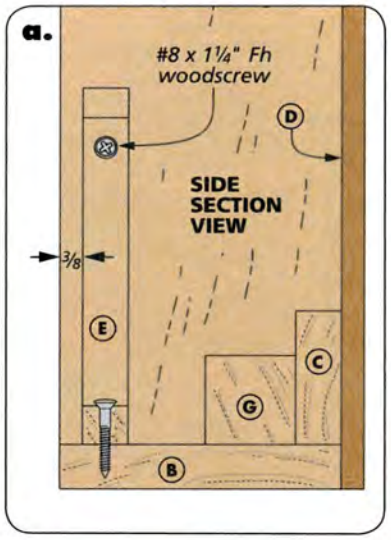

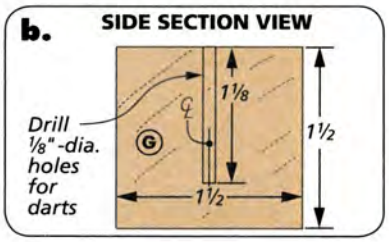

DOOR CATCH BLOCKS. You'll also find the pattern for the door catches at right. As before, cut and sand them to final shape. Then drill the holes for the magnets. The catches are glued in place, flush with the front edge of the case.

DART HOLDERS. I glued up narrow stock to make the 1½"-thick dart holders. After that, just cut them to final size and drill holes for the points of your darts (detail 'b').

MOUNTING PLATE. Now, add the mounting plate. It provides a base for the metal bracket that comes with the dartboard. Center it on the back and glue it in place.

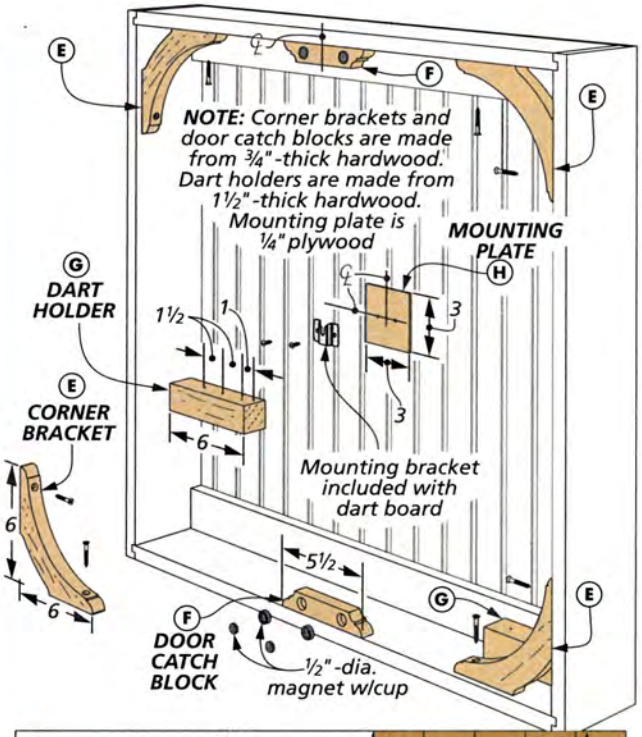

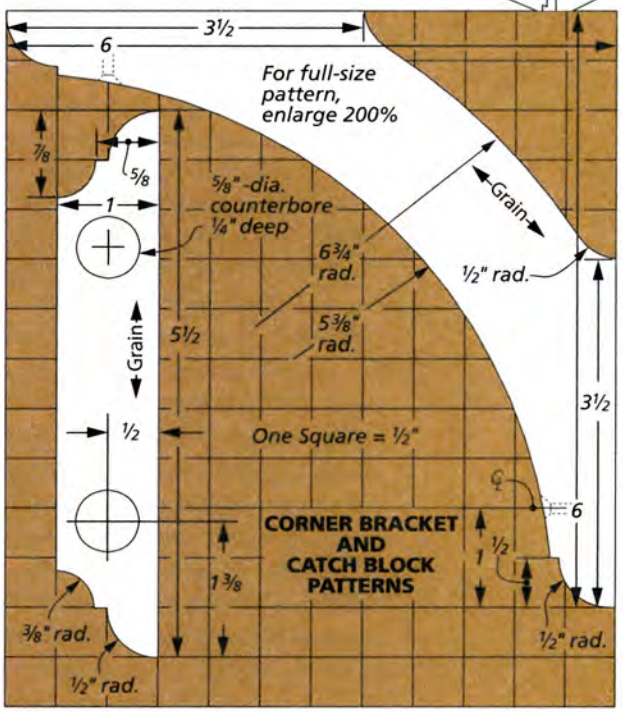

Shaping the Brackets

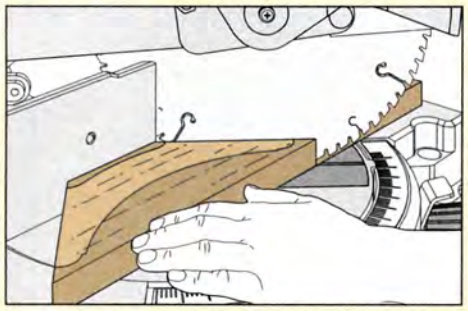

Start with the Miters. *After tracing the pattern for the bracket on an oversize blank, miter both ends.*

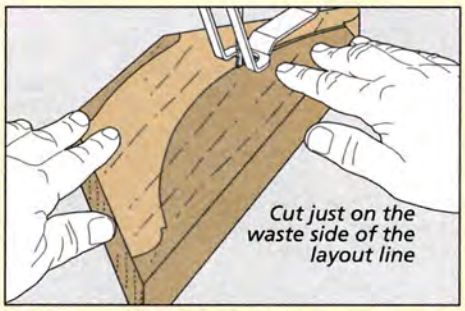

Cut Out the Shape. *You can cut out the shape of the brackets using a scroll saw, jig saw, or band saw.*

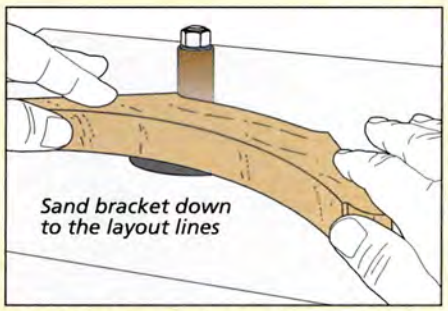

Sanding. *A spindle sander works great for removing the saw marks and cleaning up the edges of the brackets.*

completing the CABINET

After assembling the basic case, the next step is to add a pair of frame and panel doors. I used simple stub tenon and groove joinery to build the doors.

On the inside, I installed a scoreboard on each door with a chalk tray below. Then it's just a matter of adding some moldings, and the cabinet will be ready to install.

DOORS. I started by cutting the stiles and the rails to final size. Then you'll add a groove on the inside edge of each piece. Note that the mid rails have a groove on both edges.

The box below shows how to cut the grooves and stub tenons for the door parts. Each door also requires three plywood panels.

ASSEMBLY. Now you can assemble the doors. When the glue dries, take the doors back to the table saw and cut the groove along the front face that holds the bead molding. The right drawing below has the details.

MOLDINGS. I used a commercially available cove molding at the top of each door. (Refer to Sources on page 51 for information.) The rest of the moldings are shop made. The left and center drawings at the bottom of the opposite page show you how to make them. There's no mitering necessary. Just cut each piece to fit the door and install them with glue and screws.

SCOREBOARDS. It wouldn't be much of dart cabinet if it didn't include a scoreboard. I put one on each door because they're so easy to make. They're just hardboard sprayed with a chalkboard paint. Shop Notebook on page 29

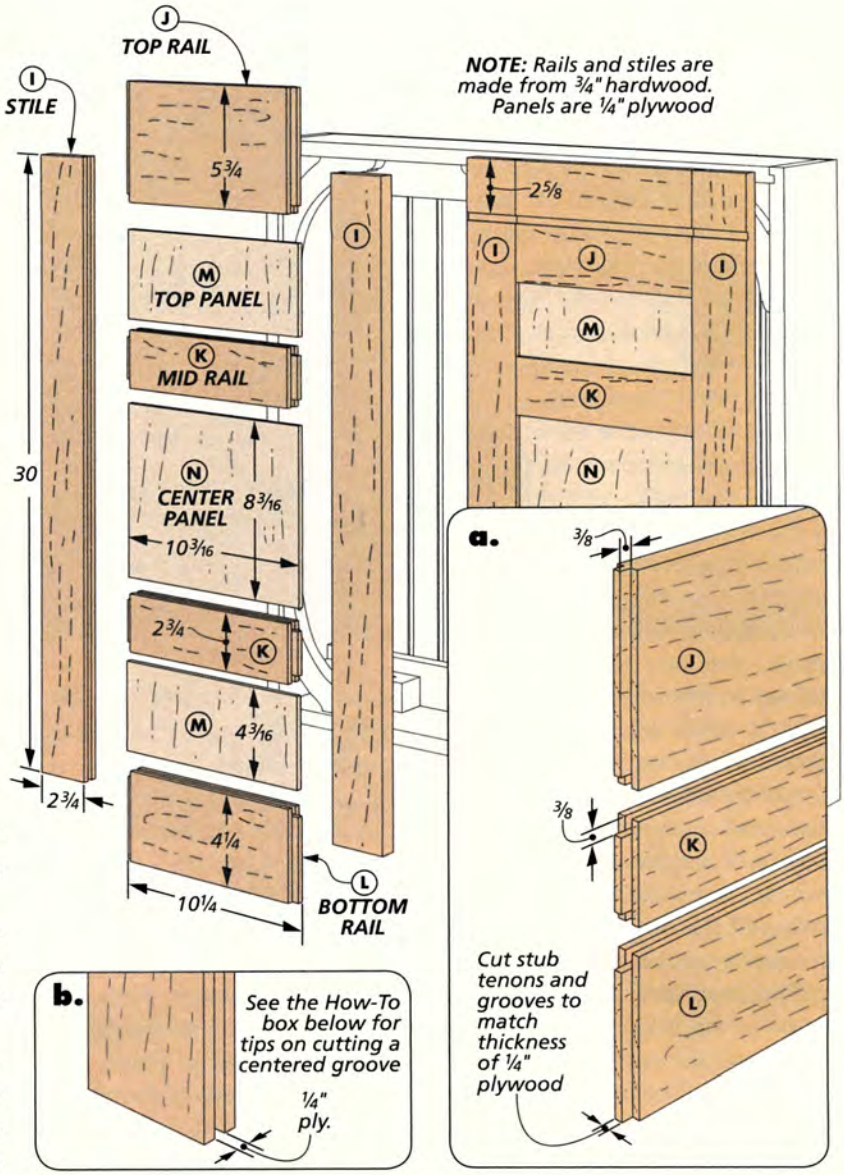

How-To: Door Frame Parts

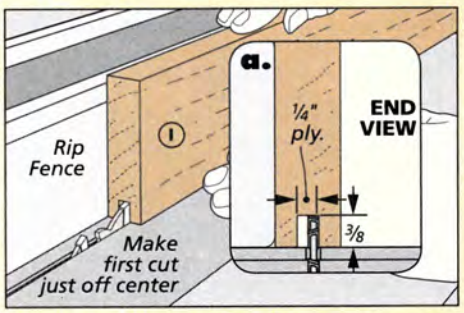

Groove. *To cut the centered grooves, make the first cut, then flip the workpiece and make the second cut.*

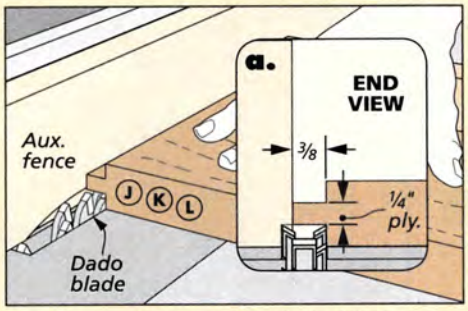

Tongues. *Bury a wide dado blade in an auxiliary fence to cut the tongues. Sneak up on a snug fit to the grooves.*

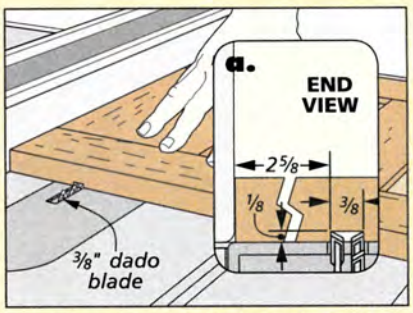

Molding Channel. *Use a dado blade and the rip fence to cut the shallow groove for the bead molding.*

covers the process of painting and adding the numbers.

CHALK TRAYS. A handy chalk tray gets mounted under each scoreboard. The right drawing below illustrates how I used a couple of stop blocks to "drop in" the blank and rout the shallow, centered recess in each. The blocks not only limit the length of cut, but they allow you to keep your hands well out of the way during the process.

Finally, another small piece of cove molding fits under the chalk trays. To give the molding a more finished look, I mitered a small return for each end.

Once you've attached the chalk tray and molding to the painted scoreboard, you can mount the board on the door. For this, I used small screws and finish washers.

MAGNETS & WASHERS. You can now drill screw holes in the doors to hold the magnetic washers as shown in the main drawing. The washers work with the magnets in the door catch blocks.

Detail 'a' shows the position for the washers I installed on the upper outside edge of both doors. Magnets mounted in the case sides hold the doors open when in use.

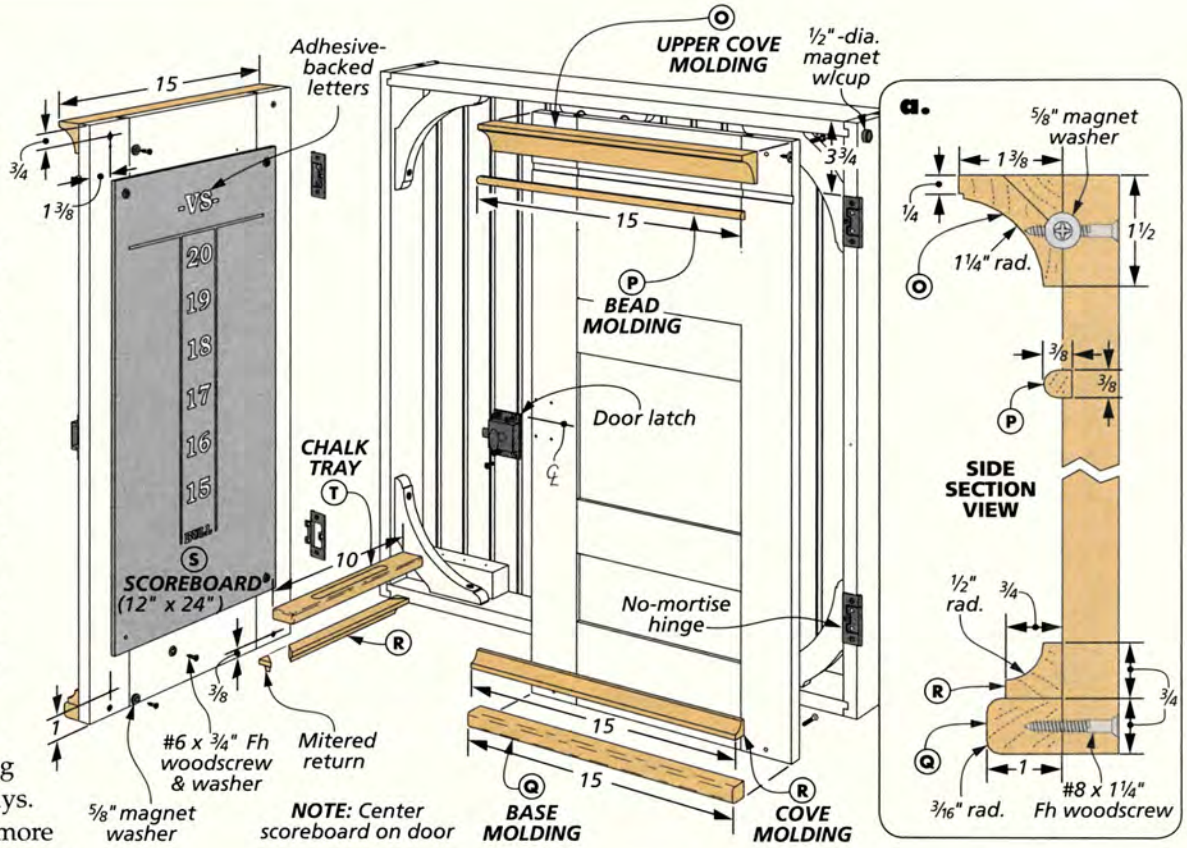

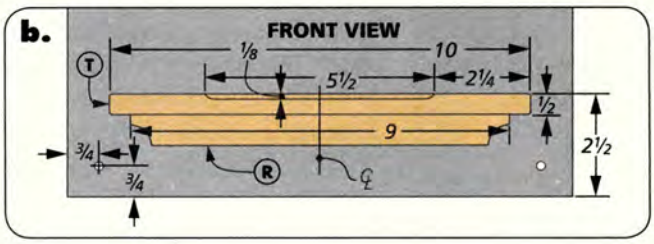

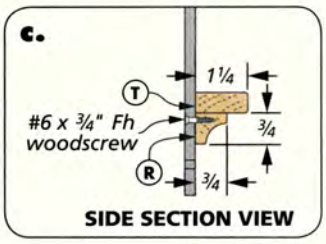

I used no-mortise hinges to hang the doors. There's nothing tough about installing these hinges. Just lay out the position on the cabinet sides and attach the hinges with screws. Put the door in position with shims to give it an even gap all around. Then screw the hinge to the door.

After hanging the doors, I installed the latch with screws. Now, you can paint the beadboard back and screw it in place.

You can find the details of how I stained and finished the cabinet on page 51. When you're done, just hang the cabinet and mount the dartboard. W

Door Moldings & Chalk Trays

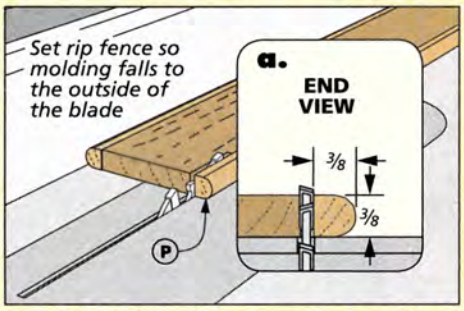

Bead Molding. *Rout the bead profile on an extra-wide blank. Then rip the strips of molding free at the table saw.*

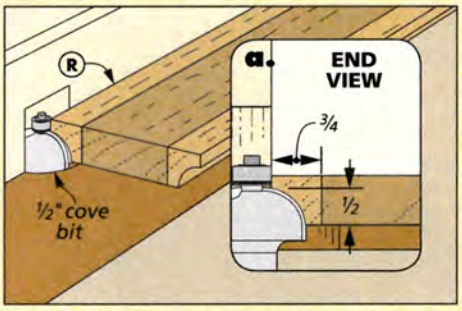

Cove Molding. *With a cove bit in the router table, rout the molding in two passes to avoid tearout.*

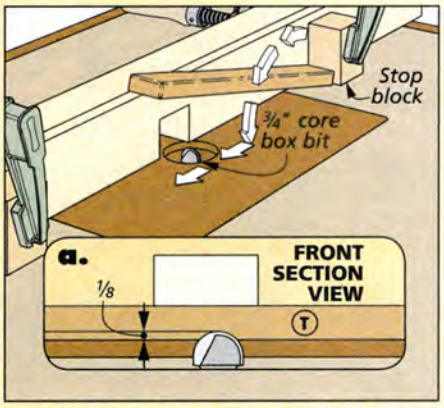

Chalk Trays. *Clamp stop blocks to the fence to limit the length of cut and lower the workpiece onto the bit.*

SHOP NOTEBOOK

Beveling Jig

The design of the TV lift cabinet on page 30 calls for a wide bevel on the underside of the tops for the main case and upper case. The size of the assemblies means that cutting these bevels on the table saw isn't practical. So to handle this job, I put together the adjustable router jig shown in the photo above. The jig relies on a 1½"-long, ½"-dia. straight bit to cut the bevels cleanly and manageably.

THE JIG. The drawings below show how the jig goes together. An auxiliary router base is attached to a large fence at a 70° angle (the bevel angle is 20°). One side of the fence is fastened through a curved slot in the base. This allows the position of the fence and depth of cut to be adjusted easily. A bit guard and handle attached to the fence make the jig more user friendly.

THE CUTS. The best way to create a smooth profile is with multiple passes. The initial cuts can be about ⅛" in depth. And as the bevel lengthens with each set of passes, lighten up on the depth of cut (details 'c' and 'd').

Start at the back right corner and move right to left around the top. As you see in the photo above, I clamped a backup piece behind the left end of the top. This prevents tearout as the bit exits.

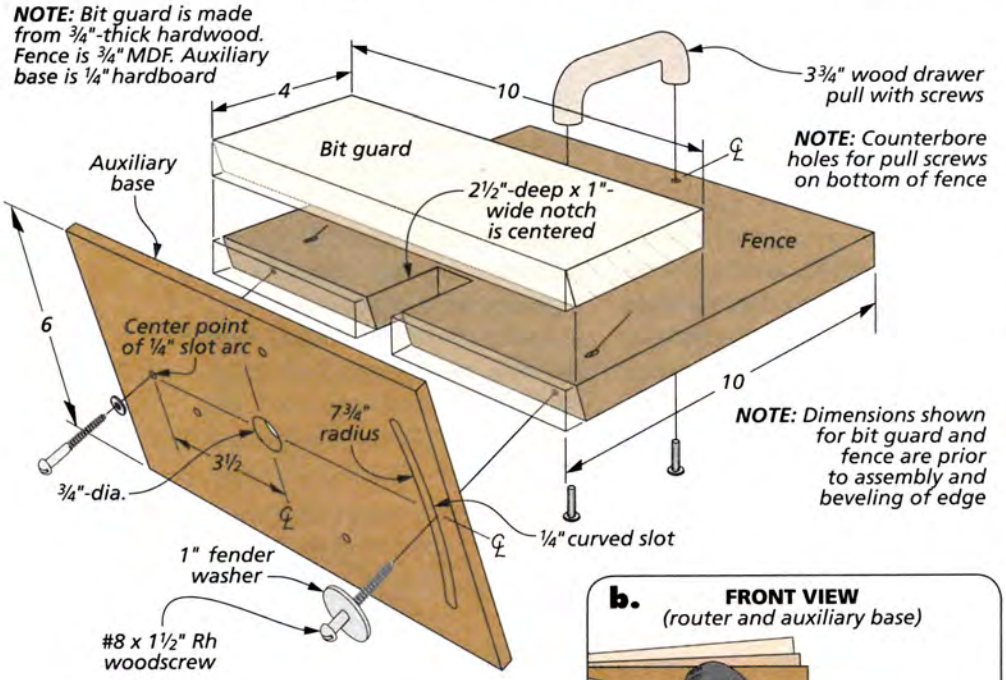

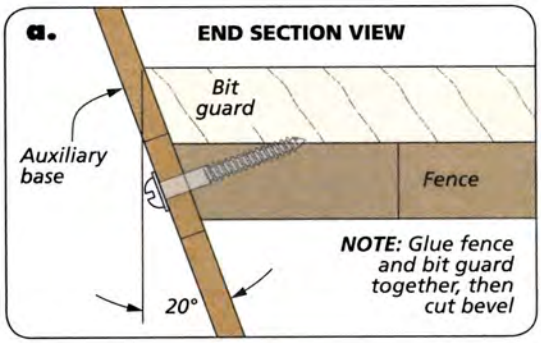

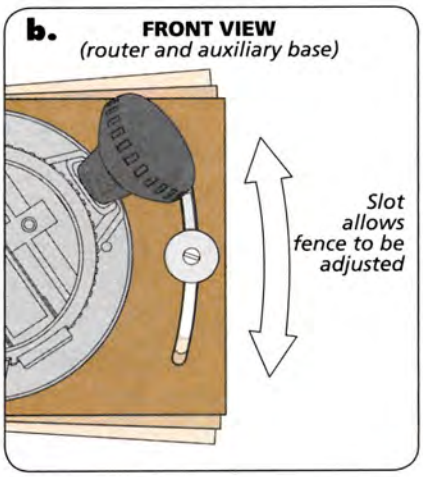

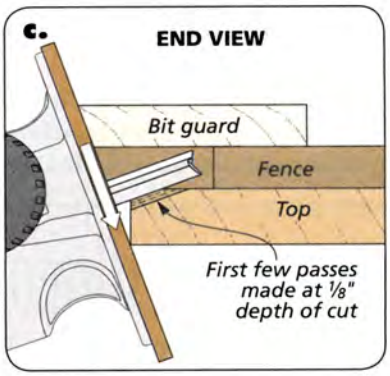

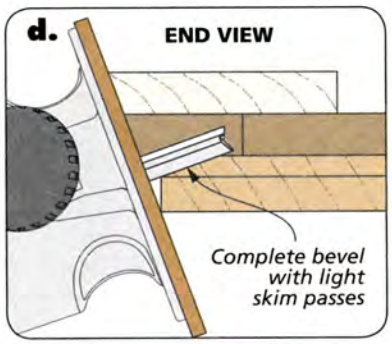

Panel Support Block

When assembling the lower case of the TV lift cabinet, I needed a way to hold the large plywood panels upright and square to each other while I installed the screws. Furthermore, I wanted to raise the panels high enough to allow clamps to be slipped underneath. The slotted support blocks you see at right are the answer.

The square blocks are cut from a long blank glued up from three layers of ¾" MDF. A dado blade makes quick work of cutting two perpendicular slots in one face (Figures 1 and 2).

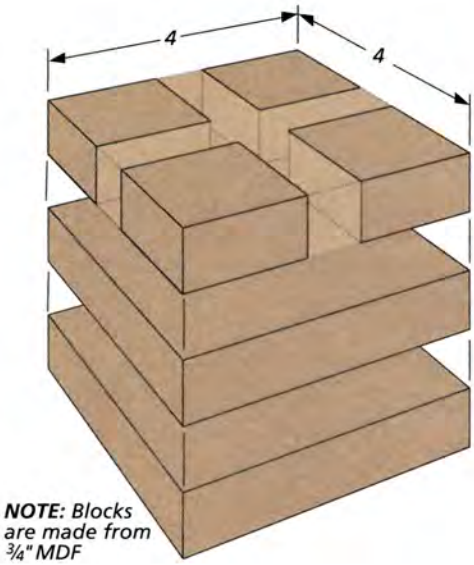

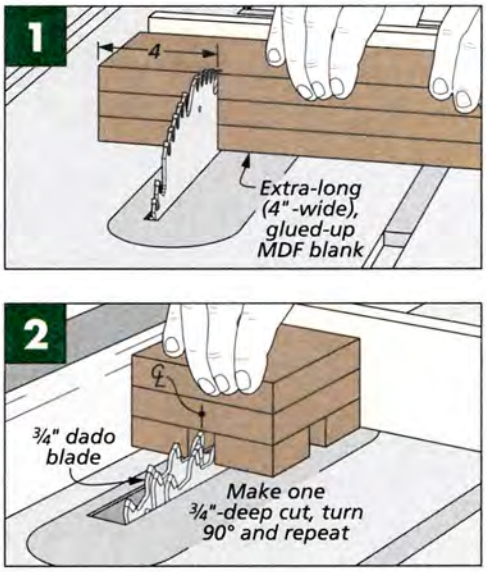

Cove & Bead Molding

The drawers of the oak nightstand (page 14) are wrapped with hardwood molding. The molding features a classic "cove and bead" profile on a narrow, rabbeted workpiece. It's easy to make in just a few simple steps.

ROUTER TABLE. The first step in making the molding is to cut long blanks to size that are a bit more than twice as wide as the finished molding (Figure 1). This way, you can get two pieces of molding from each blank. Now set the height of the router bit and rout each edge of the blank. Do this in multiple passes by adjusting the fence between each cut.

TABLE SAW. Now you're ready to rip each blank into two molding strips at the table saw. After that, all that's left is the rabbet, which is cut in two passes using a standard saw blade, as shown in Figures 2 and 3. Mitering the molding to fit around each drawer front will complete the job.

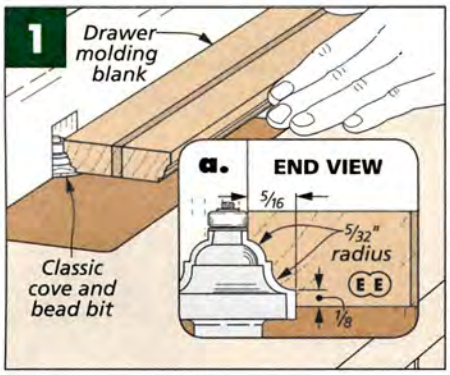

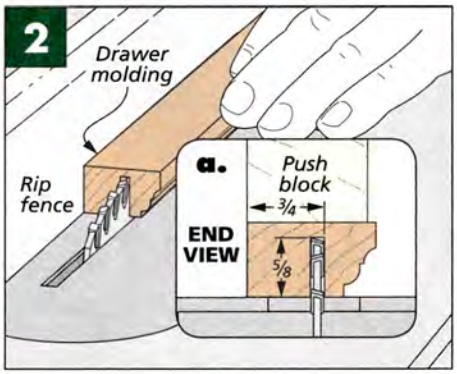

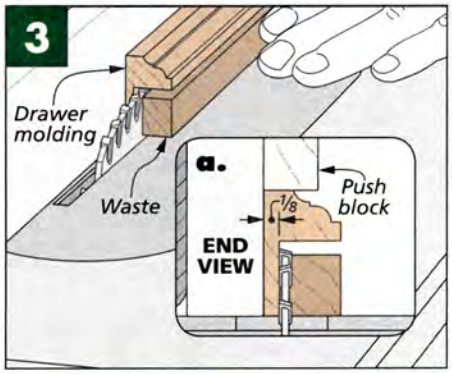

Chalk It Up

The dartboard cabinet on page 22 needed a pair of scoreboards, but I couldn't find actual slate chalkboards in the right size. Instead, I turned to a can of spray paint and a piece of tempered hardboard.

The chalkboard spray paint shown in the photo at right worked like a champ. All you need to do is cut the hardboard to size and drill the countersunk screw holes to mount it to the cabinet.

After that, I started the paint job by first spraying on a couple coats of gray primer. You'll want to let the primer dry and sand it smooth before spraying on the chalkboard paint. I used two coats to get a nice, flat look. Best of all, it works like a regular chalkboard.

To complete the scoreboards, I used adhesive-backed, plastic letters and numbers. They gave the boards a professional look.

With a can of chalkboard spray paint and a pack of stick-on letters and numbers, you can turn a piece of hardboard into a handy scoreboard.

flat-screen TV Lift Cabinet

Now you see it, now you don't. This stylish and practical cabinet allows you to have your flat-screen TV visible only when necessary.

Today's large, flat-screen TVs are certainly not unattractive, but can be a bit overwhelming when on permanent display. This cleverly designed cabinet offers a solution that allows you to have your cake and eat it too. The secret is a smoothly operating lift mechanism that raises the TV out of the back of the cabinet for viewing. And when you want to make the TV disappear, presto, it descends to be hidden until needed again.

But that's just half the story, or I should say, half the project. The cabinet also provides space and storage for all the gadgets and accessories that enhance your entertainment experience. A combination of drawers, enclosed shelving, and open cubbies offers a variety of options.

If all this sounds complicated to build, don't be concerned. Barebones, yet solid, joinery and a few simple design tricks make this project go together in a snap. And when it's completed, the fun really begins. You might have the only levitating TV on the block.

CONSTRUCTION DETAIL

OVERALL DIMENSIONS:
28¼"D x 64"W x 39¾"H

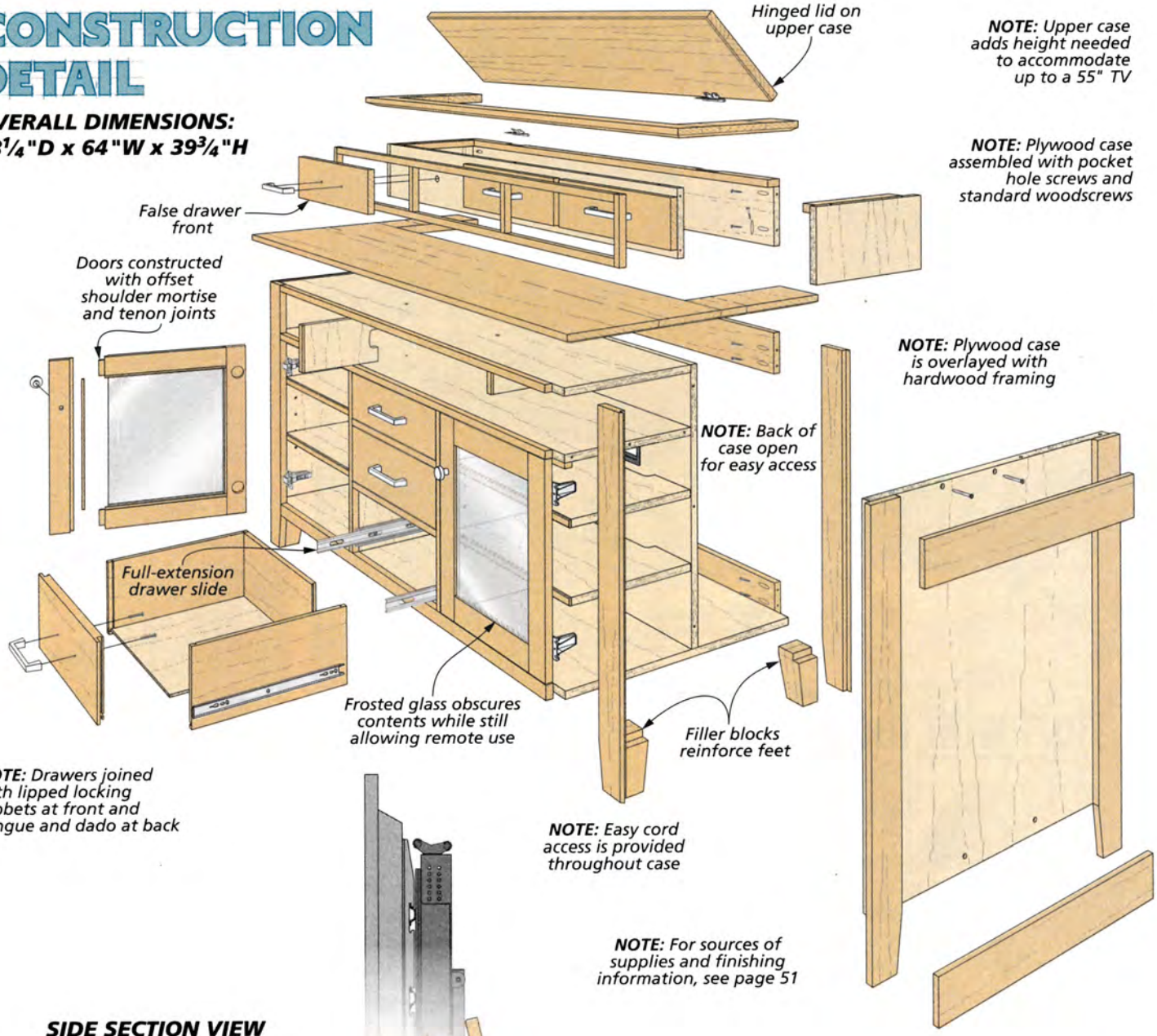

SIDE SECTION VIEW

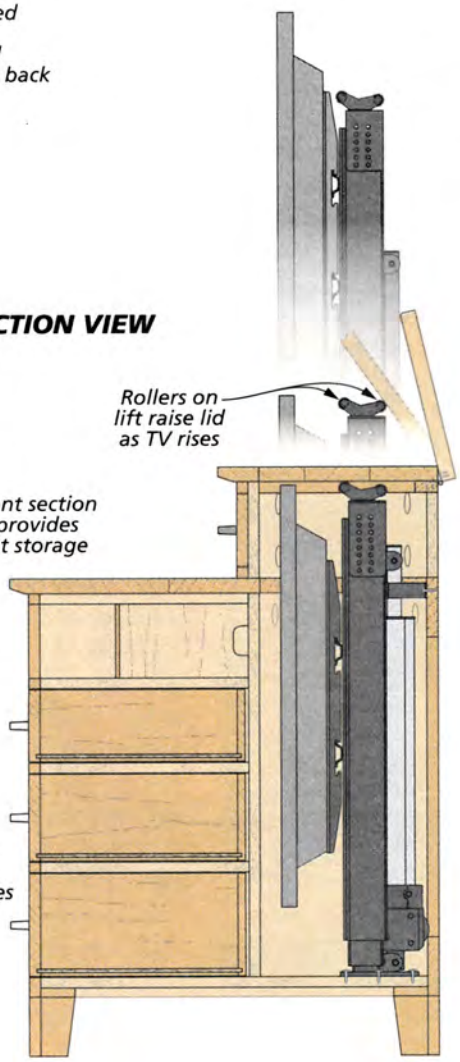

▲ With the TV lowered, all you see is an attractive storage cabinet. You might never guess what's hidden in the rear compartment.

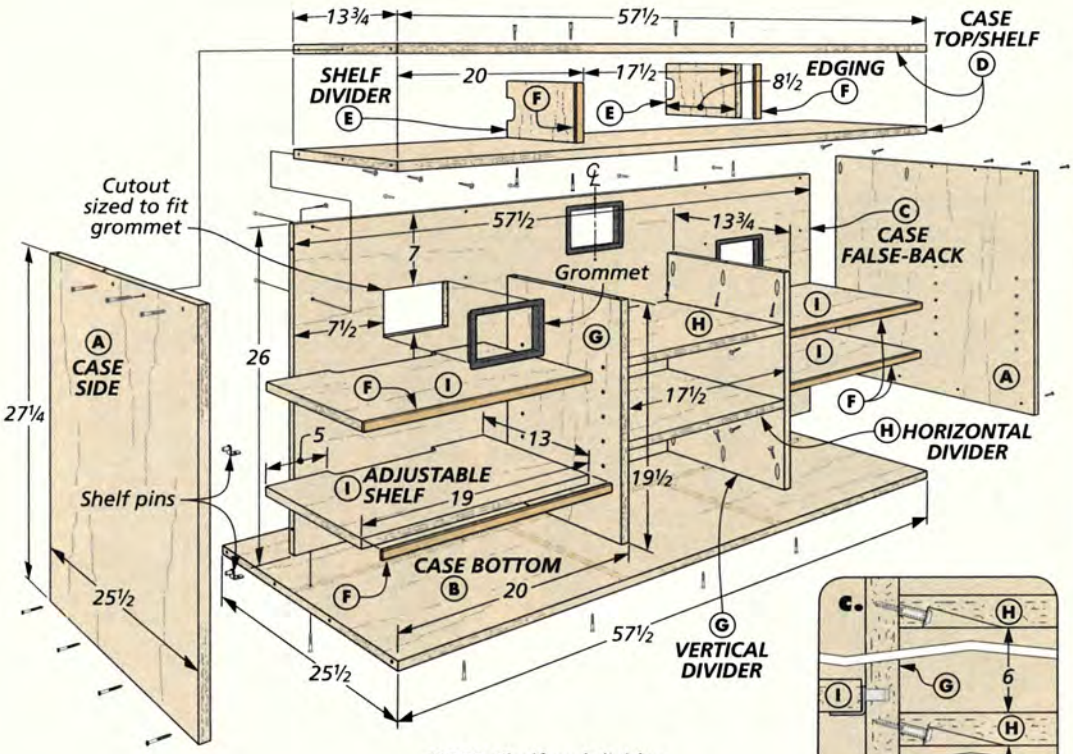

NOTE: Shelf and divider edging is ¼"-thick hardwood. All other parts are ¾" plywood

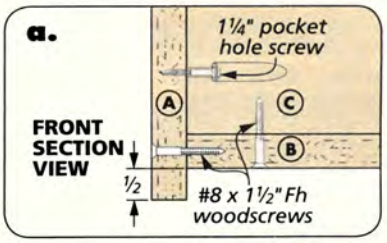

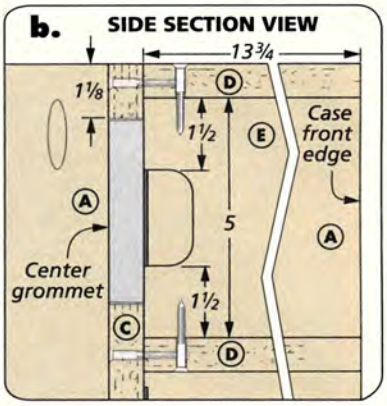

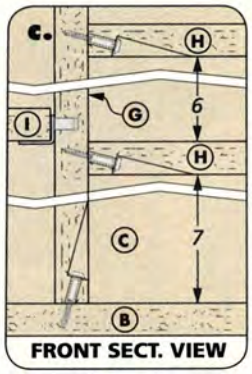

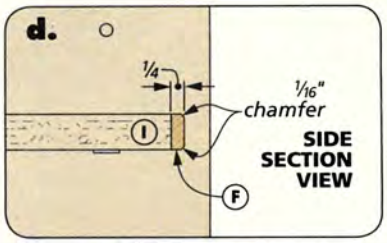

start with the CASE

You'll start by assembling the large plywood case that forms the foundation of the cabinet. To keep this task manageable, I relied on standard woodscrews and pocket hole screws for joinery.

OVERVIEW. The deep case is divided into multiple compartments (drawing above). At the front of the case, open cubbies separated by shallow dividers run across the top. Below, a centered bank of three drawers is flanked by enclosed shelving compartments. A section across the back of the case is walled off to hold the TV and lift. The TV compartment isn't enclosed with a back panel — just an open frame. This allows easy access.

GETTING STARTED. The first pieces you'll need are the two sides, the bottom, and the false-back. Once these are cut to size, you can start drilling pilot holes.

The case sides are fastened to the top and bottom with standard woodscrews. (Later, they'll be covered by solid-wood framing.) So your first task is to drill a row of countersunk pilot holes across the bottom of each side panel and a second short series at the top. In addition, the side panels need a pair of pocket screw holes on the inside along the back of the top edge. These are used to attach the solid-wood top.

BOTTOM. All the bottom needs is a series of countersunk pilot holes spaced along the length of the panel near the middle. These will be used to fasten the false-back to the bottom.

FALSE-BACK. The work on the false-back takes longer. First, there are pocket screw holes at each side drilled from the back (detail 'a'). Next come several series of countersunk pilot holes used to fasten

How-To: Divider & Shelf Cutouts

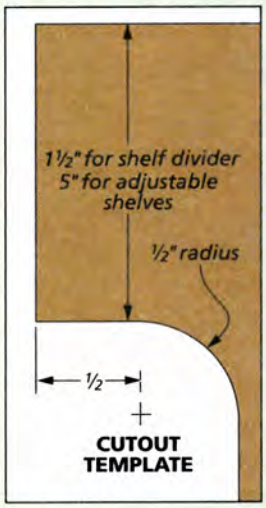

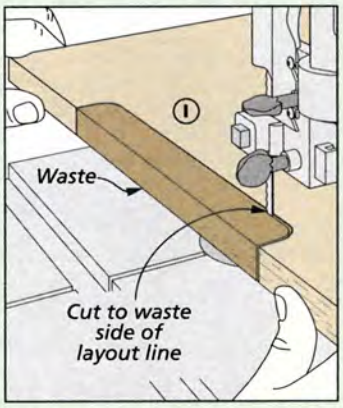

Band Saw. *Lay out the shape, then remove the waste staying to the outside of the line.*

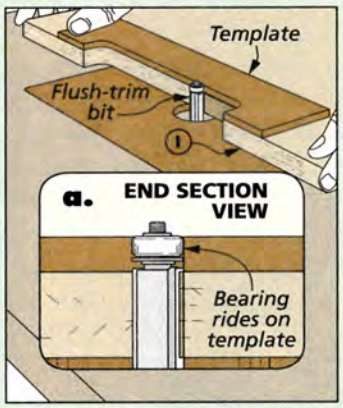

Trim. *Next, I used a hardboard template and a flush-trim bit to smooth the cuts.*

the plywood top and internal panels. Finally, you'll form three cord access openings that are fitted with plastic grommets.

Cutting the access holes is the only challenge and it's a modest one. Flanges on the grommets cover the edges so the fit doesn't need to be perfect. Just lay out the shape, drill starter holes, and remove the waste with a jig saw.

ASSEMBLY. Once these tasks are completed, the sides, bottom, and false-back can be assembled. The trick is to keep the pieces aligned and in tight contact while the screws are installed. The How-To box at right provides guidance. Cleats and spacers are the key.

CUBBY ASSEMBLY. Next, you'll add the cubby assembly to the case. This consists of a top panel, a shelf panel and a pair of dividers.

The top and shelf can be cut to identical size. The shelf needs three pocket holes on the underside at each end and then both panels have countersunk screw holes to fasten the dividers.

The recessed dividers have edging on the fronts. I also formed cord cutouts on the back edges using the technique shown on the opposite page. Then you can assemble this section and add it to the case as described at right.

LOWER DIVIDERS. The final pieces to install are a pair of vertical dividers and two horizontal dividers. These are installed one at a time — first the vertical dividers followed by the horizontal dividers.

Pocket hole screws hold the vertical dividers in place. Spacers will help keep them in position while installing the screws. Then the horizontal dividers are added, also using pocket hole screws and spacers (detail 'c,' opposite page).

SHELVES. You can wrap up this phase by drilling sets of shelf pin holes in the side compartments and making four shelves. A template makes drilling shelf pin holes go quickly (How-To box). The shelves will need edging on the fronts and a cutout at the back (How-To, opposite page).

How-To: Step-by-Step Assembly

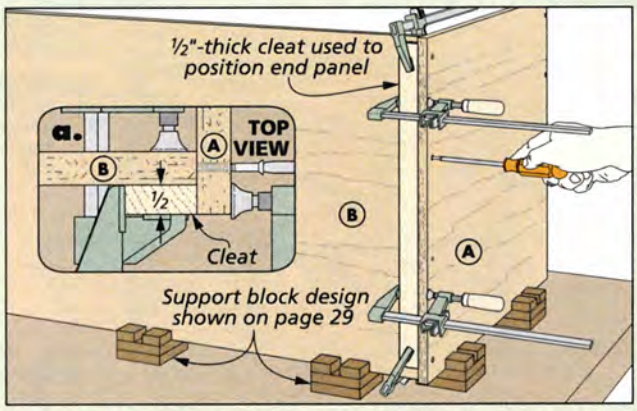

Side to Bottom. *Start the assembly by clamping a cleat flush with one side of the case bottom. Then clamp the case side to the cleat before installing the screws.*

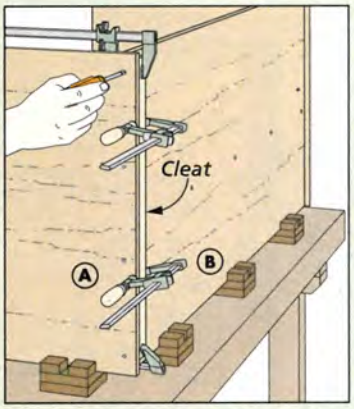

Opposite Side. *The other side of the case can now be attached in the same way.*

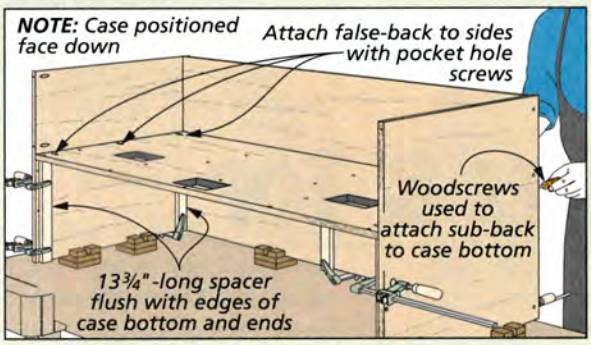

Add the False-Back. *Before installing the false-back, I clamped supports to the case sides and bottom and then turned the assembly onto its front.*

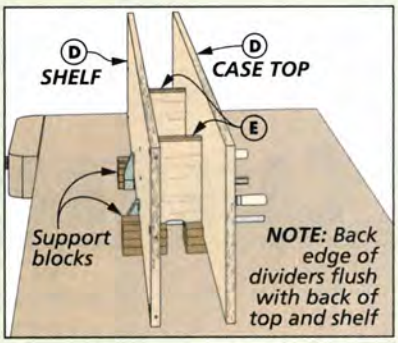

Assemble Cubbies. *Clamp the shelf dividers between the case top and shelf, then install the screws.*

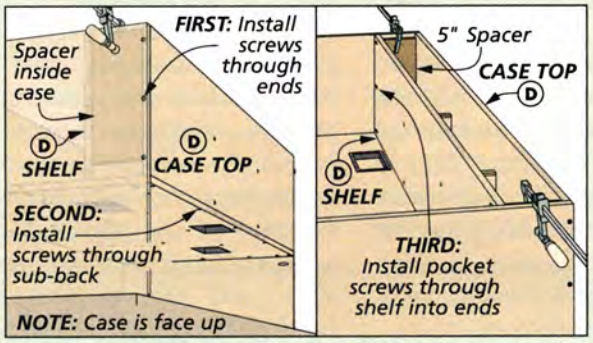

Add Cubbies. *Flip the case onto its back to install the cubby assembly. Attach the top first. Spacers will hold the shelf in place while driving the pocket screws.*

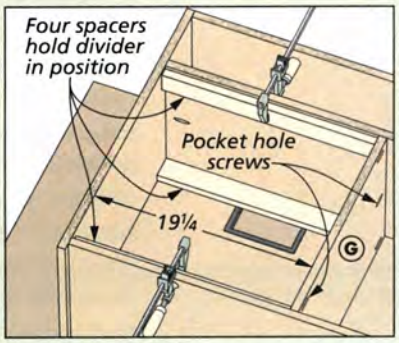

Vertical Dividers. *Spacers at the top and bottom align the dividers while installing pocket hole screws.*

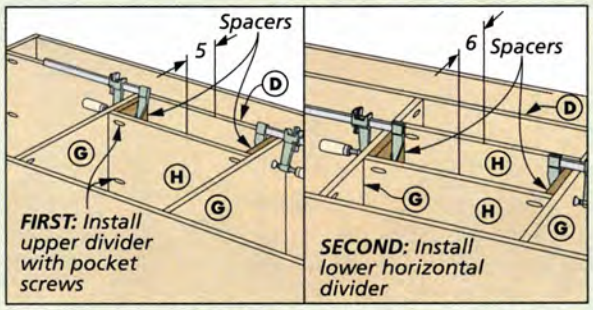

Finally, Horizontal Dividers. *The horizontal dividers are likewise installed using spacers. One set for the upper divider and a wider set for the lower divider.*

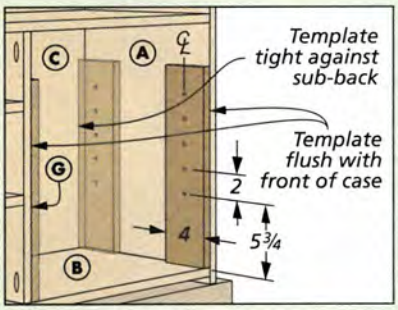

Shelf Pin Holes. *Once the assembly is completed, drill shelf pin holes in both side compartments.*

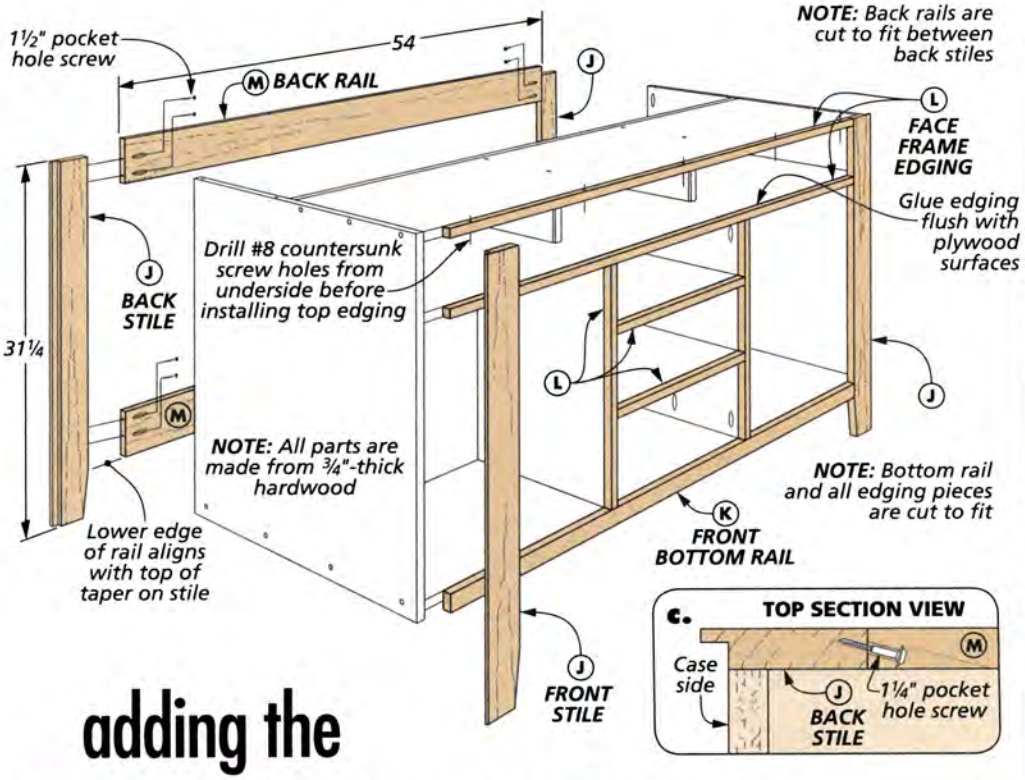

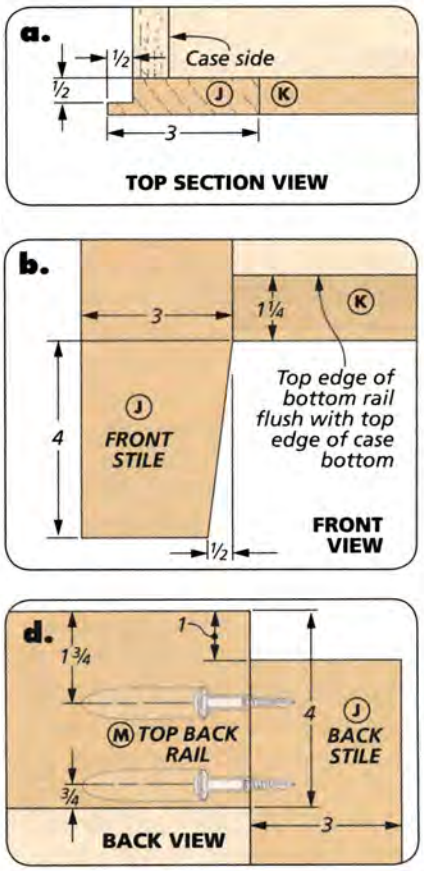

adding the CASE FRAMES & TOP

With the case assembled, you can now add the hardwood framing that overlays it. The front comes first, followed by the back, and finally, the two sides. The fact that most of the pieces are glued in place with butt joints makes this a fairly straightforward task.

STILES. Since the front and back stiles are identical pairs, I started by making both at once. As you can see in detail 'a,' the outside edges are rabbeted to capture the edges of the side stiles. Furthermore, the lower ends of the stiles are tapered to form feet.

Once the blanks are cut to size, the box below leads you through both operations. When the front stiles are glued in place, the shoulders of the rabbets should be flush with the sides (detail 'c').

RAILS & EDGING. With the stiles in place, you can fit the lower rail and middle and upper edging pieces and then glue them to the case. The width of the middle and upper rail should match the thickness of the plywood. The upper rail has countersunk screw holes used later to fasten the top. I used clamps with wedges to apply pressure to the middle piece. Finally, the edging for the vertical and horizontal dividers is added in the same way.

THE BACK FRAME. The back frame consists of just two stiles and an upper and lower rail. However, this frame is joined with pocket hole screws, as shown above.

The two rails are identical in size. But note that the upper rail is installed proud of the ends of the stiles (detail 'd'). This extension fills a gap at the back of the solid-wood top you'll add later.

I sized the frame by clamping the two stiles in position on the case and cutting the rails to fit between them. Then you can assemble the frame with pocket hole screws. Finally, glue and clamp the frame to the case, taking care to align it with the sides.

SIDE FRAMES. With the front and back frames in place, fitting the side frames is easy. Each consists of a pair of stiles and an upper and lower rail. The stiles are cut from stock planed to ½" thick, while the rails are just ⅜" thick.

After cutting the side stiles to size and shaping the feet, the stiles

How-To: Front & Back Stiles

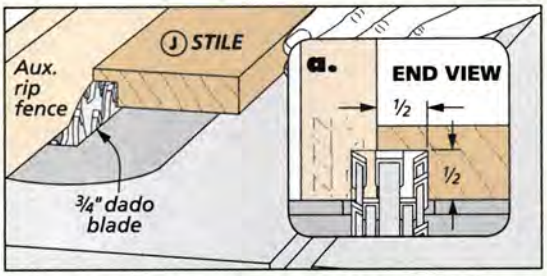

Stile Rabbet. *I used a dado blade buried in an auxiliary rip fence to cut the ½" square rabbets in the front and back face frame stiles.*

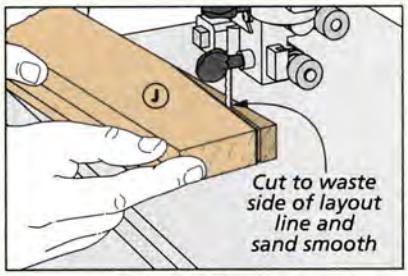

Tapers. *After laying out the taper on each stile, remove the waste at the band saw and sand the edges.*

can be glued to the case (detail 'c'). Thick cauls will provide a clamping surface on the interior of the case. Once all four side stiles are in place, the rails can be cut to fit between them and glued to the case flush with the upper and lower edges of the case sides.

FOOT FILLERS. The tapered feet are reinforced with filler blocks glued up from three pieces of ¾"-thick stock (detail 'b'). The box below shows how they're made. After smoothing the tapered faces, they can be glued in place.

CHAMFERS. The case needs one more detail. All four corners are chamfered to disguise the glue line between the stiles. This is easy to do with a chamfer bit in a hand-held router (How-To box).

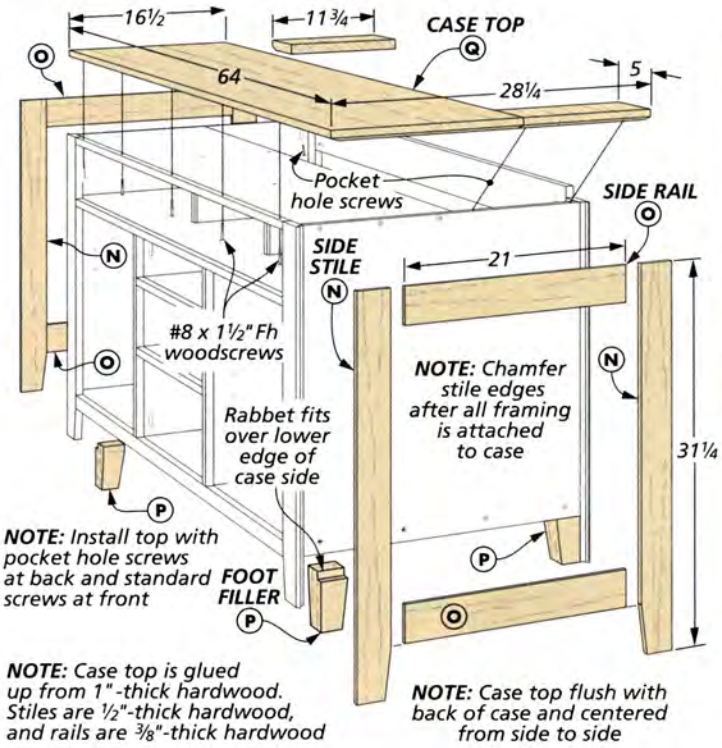

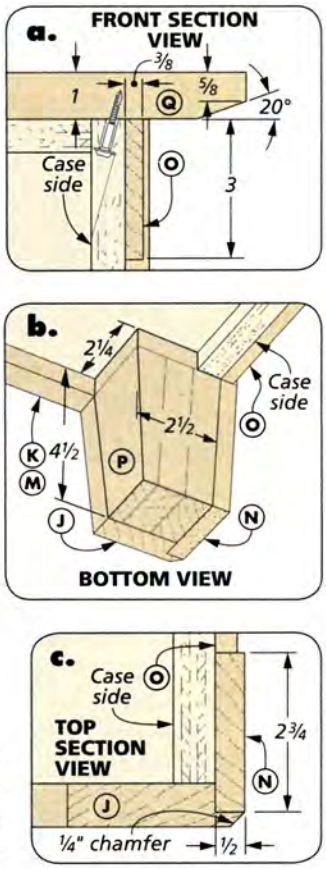

THE TOP

Adding a solid-wood top comes next. And like the case it sits on, the top has a large opening at the back. The How-To box below shows how this opening is created. I simply cut a front panel and two narrow extensions to size before gluing them together.

BEVELS. To lighten the appearance of the thick top, I beveled the lower edge of the front and sides (detail 'a'). A simple router jig and a straight bit will do the job, as described on page 28.

INSTALLATION. Once it's ready, the top is fastened to the case with both glue and screws. I glued it to the case top only through the middle, used pocket hole screws at the back, and installed standard screws through the front edging.

How-To: Make the Filler Blocks & Top

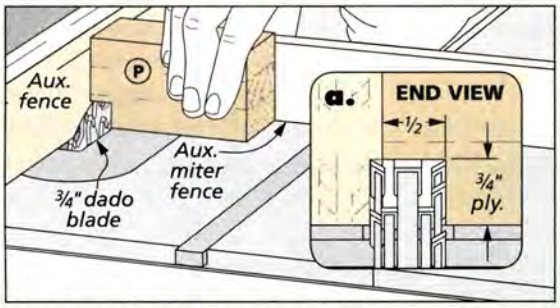

First, a Rabbet. *Once the blocks are cut to overall size, cut a rabbet along one short edge. This allows the block to fit over the case side.*

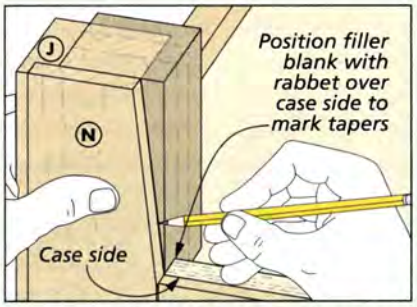

Mark Profile. *With the rabbets cut, you can position each block on the case and mark for the taper cuts.*

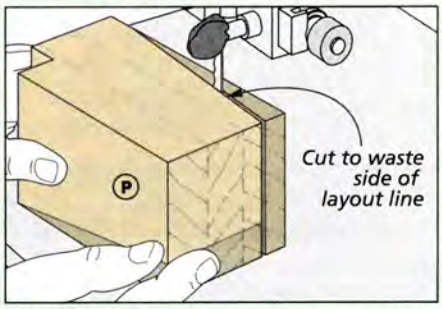

Cut the Tapers. *Finally, cut the tapers at the band saw and sand or plane the faces before gluing the blocks in place.*

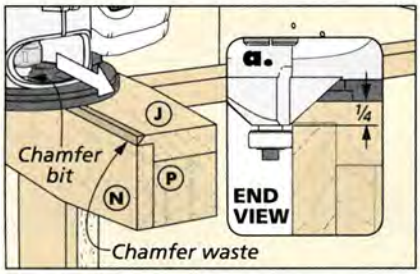

Rout a Chamfer. *You'll have to flip the case onto its front and then its back to rout chamfers on the stiles.*

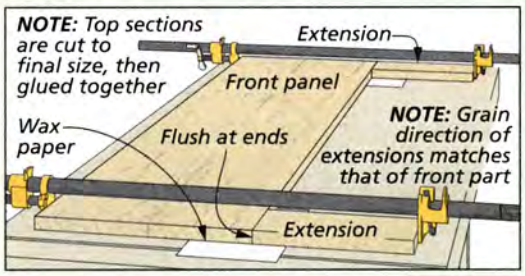

Three Sections. *When gluing up the sections of the top, make sure that the outside edges are flush and the panel ends up flat.*

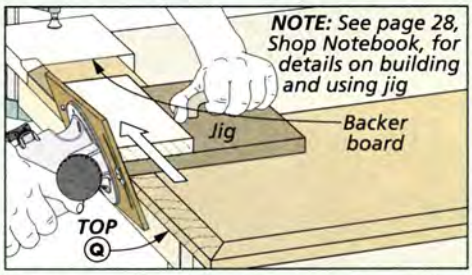

Edge Bevels. *I used a router jig with a tilted fence to form the bevels on the front and side edges of the top.*

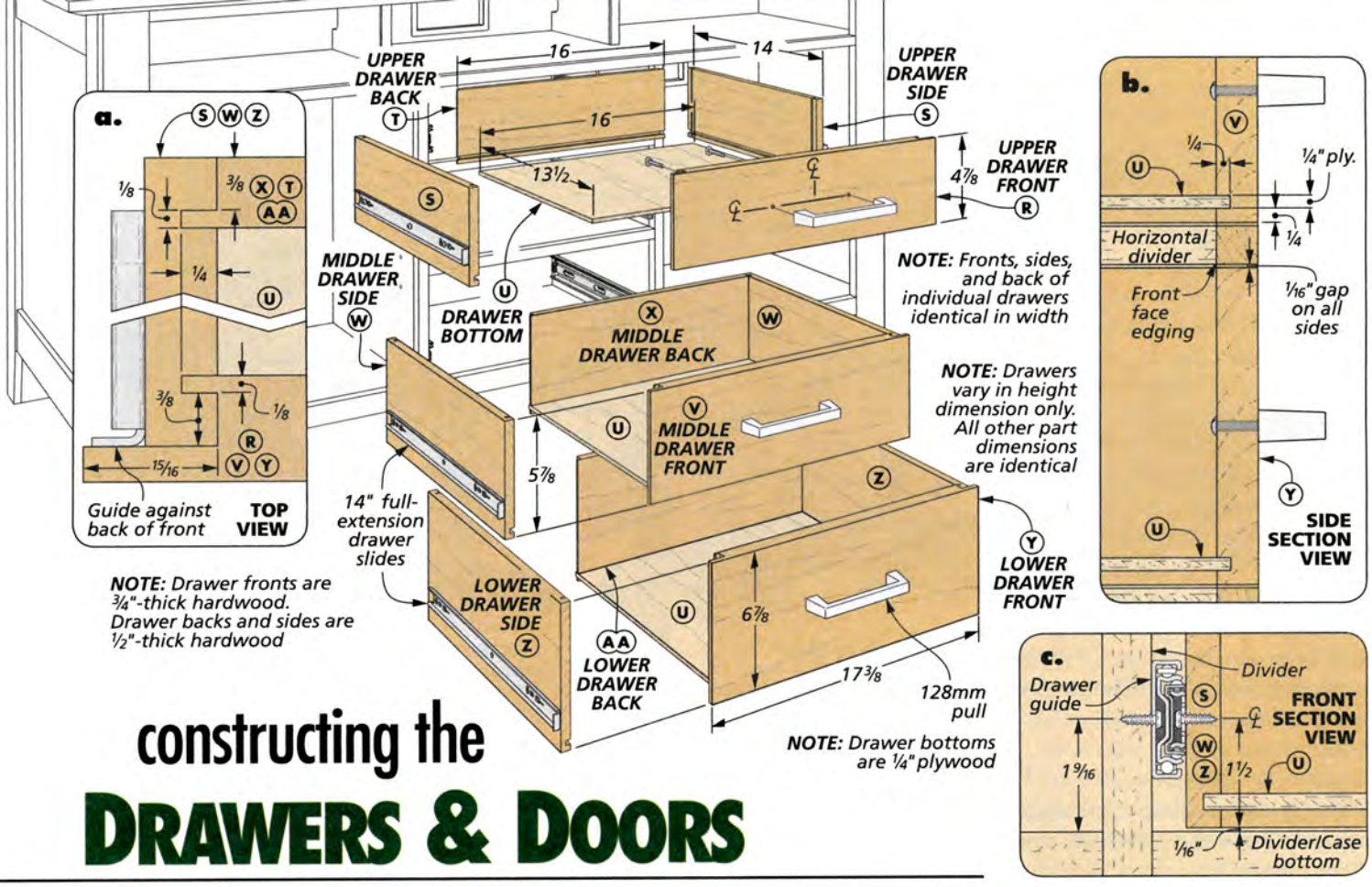

constructing the DRAWERS & DOORS

Building the three graduated drawers and a pair of doors will complete the lower cabinet. I tackled the drawers first.

DRAWER JOINERY. The drawers are designed to fit flush with the front edging and are installed in the case on metal slides. But rather than hide the slides with false fronts, I joined the sides and fronts with "lipped" locking rabbets that serve this purpose (detail 'a'). The backs and sides use tongue and dado joints.

You can start by cutting the fronts to size from ¾"-thick stock and the sides and back from ½"-thick stock. The drawers are sized for a 1/16" gap all around.

The box below shows the steps involved in cutting the drawer joinery. Even though the front and back joints are different, you can cut both concurrently, saving yourself some setup time.

The first step is to form the lip and a tongue on the ends of all the drawer fronts with a dado blade. Then after burying the same dado blade in an auxiliary rip fence, you can form the tongues on the ends of the drawer backs. You want both the front and back

How-To: Lipped Locking Rabbets

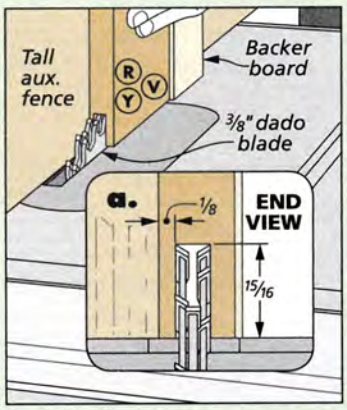

A Slot. *The first step is to cut a deep slot across both ends of the drawer fronts.*

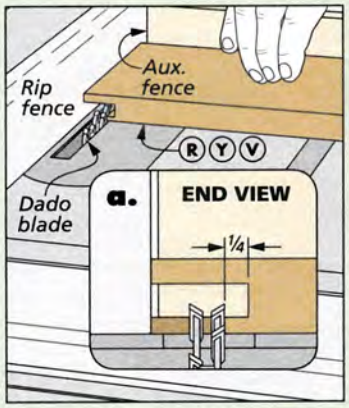

A Tongue. *Next, you'll trim back the inside shoulders to create ¼"-long tongues.*

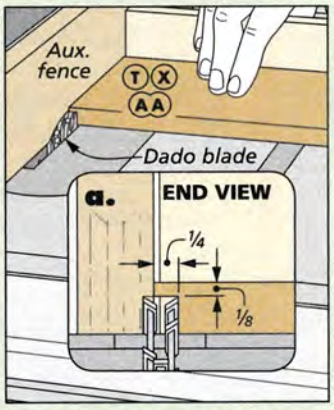

Back Tongue. *Cut rabbets to create the same size tongues on the ends of the backs.*

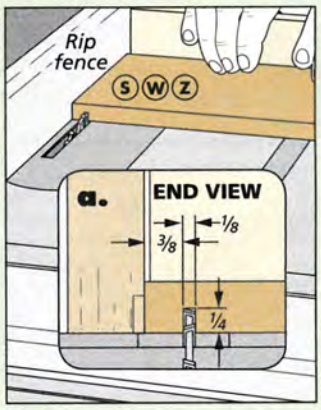

Side Dadoes. *Finally, use a standard blade to cut mating dadoes in the sides.*

tongues to be a saw blade's width (1/8") in thickness.

Finally, I switched back to a standard blade to cut dadoes in the sides to hold the tongues. The same setup will handle both dadoes on each side.

Before assembling the drawers, you'll have to cut grooves to fit the plywood bottoms and cut the bottoms to size. Then you can add the slides — drawer section first, then the case section. The drawer section fits tight to the front lip while the case section sits back 1/4" from the front facing (details 'a' and 'c,' opposite page). Adding centered pulls completes the drawers.

THE DOORS

Next up is a pair of glass-panel doors to enclose the side compartments. These are constructed with offset-shoulder mortise and tenon joints, as in detail 'a.' This creates a ready-made pocket for the glass in the assembled frame.

THE STEPS. Once you've cut the stiles and rails to size, take a look at the How-To box at right for a step-by-step guide through the joinery. As usual, cutting mortises in the stiles is the first task. This is followed by rabbeting the back, inside edges of both the stiles and the rails.

Cutting the offset shoulder tenons to fit the mortises in the rabbeted stiles will be a test of your skill. Careful setup along with test cuts are the keys to success. I cut the shorter inside cheeks first, then reset the fence to cut the outside cheeks. The offset between the tenon shoulders should match the depth of the rabbets.

HINGES & STOPS. After the tenon haunches are cut, the doors can be assembled and then installed with concealed hinges. And finally, you can add a pair of stops to the case (detail 'd').

GLASS. I waited until after the finish was applied to install the glass with strips of 1/4"-square stop. It's butt jointed and pinned in place (detail 'c'). A knob on each door is the last addition.

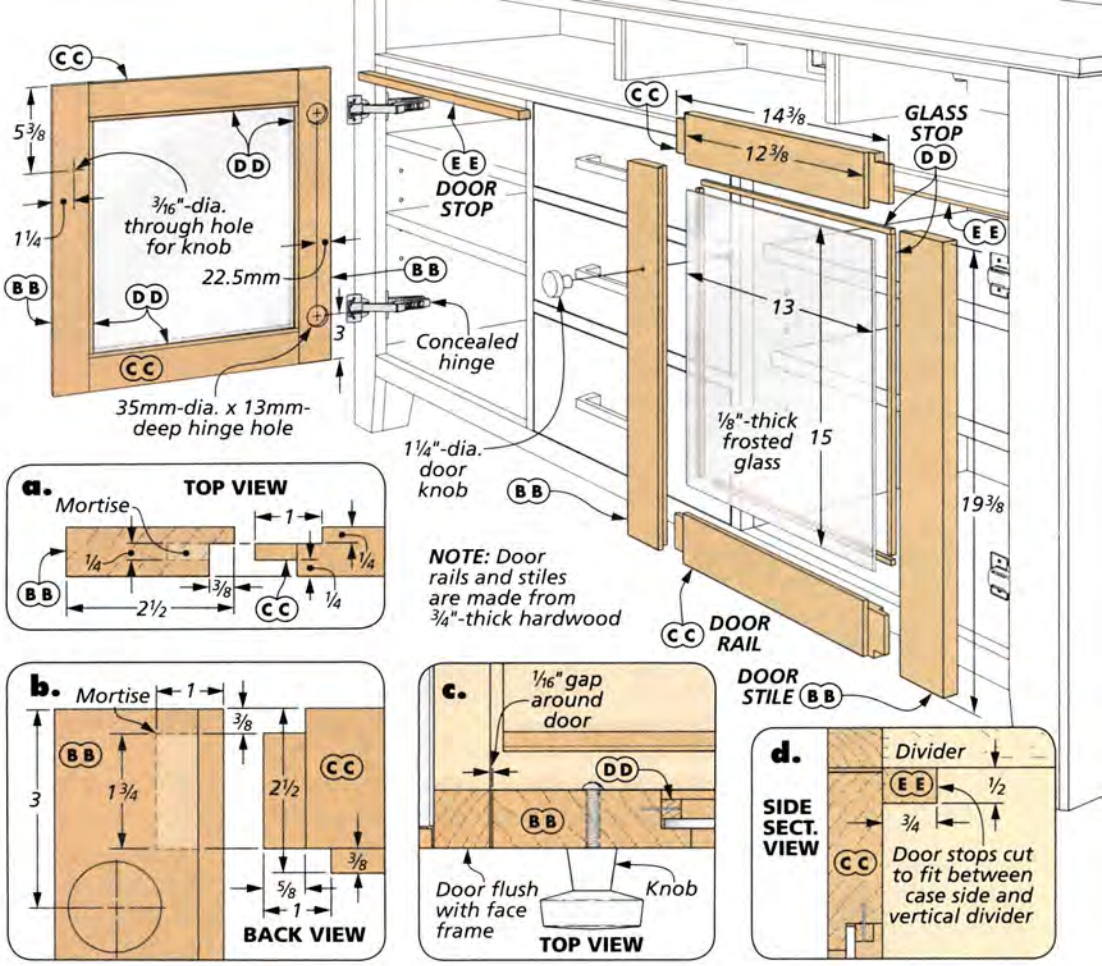

How-To: Door Joinery

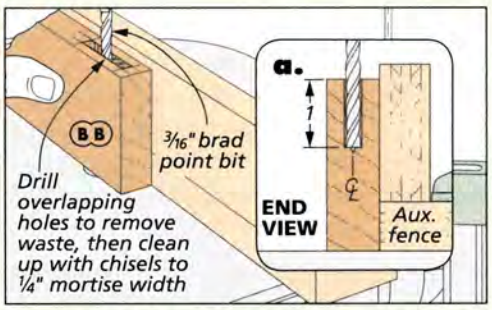

Mortises. *After laying out the mortises, drill out the waste with a series of overlapping holes. Square up the mortises with chisels.*

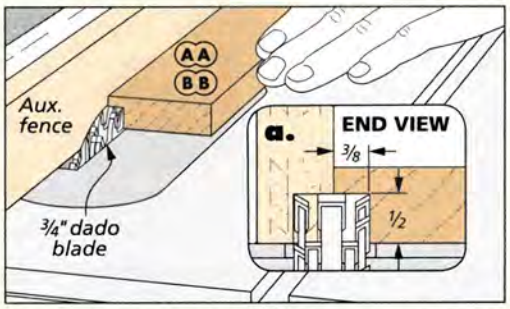

Rabbets. *The next step is to use a dado blade buried in an auxiliary rip fence to cut rabbets on both the stiles and the rails.*

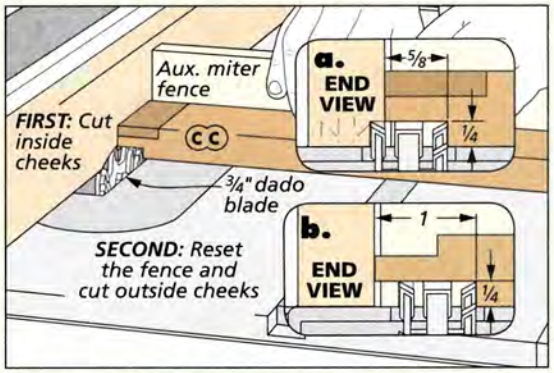

Cheeks. *Begin the tenons by adjusting the blade height with test cuts. To avoid mistakes, I always set the rip the fence to make the shorter cuts first.*

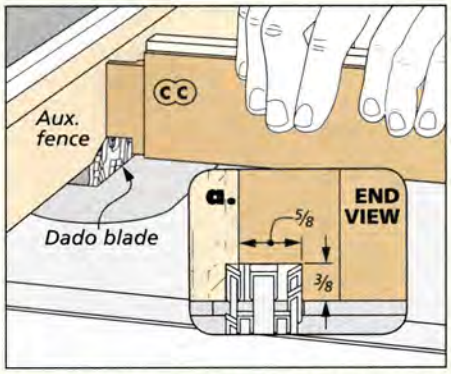

Haunch. *The tenons are completed by holding the pieces on edge to cut the haunch on the outside edge of the stiles.*

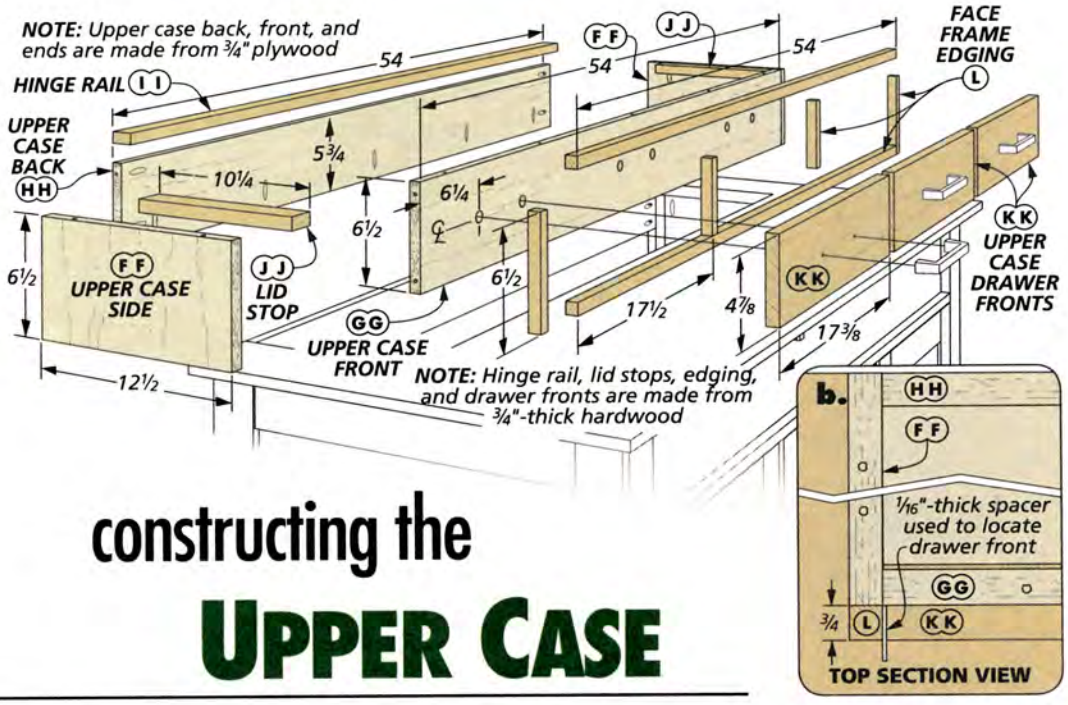

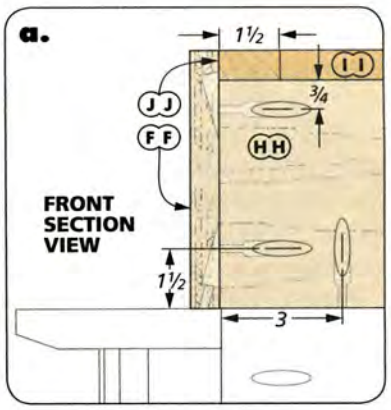

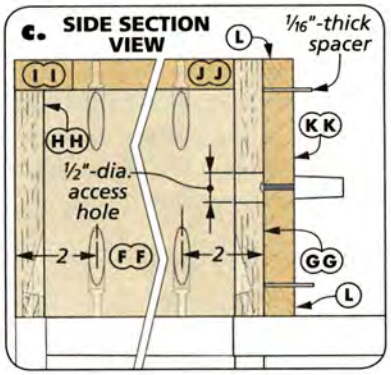

constructing the UPPER CASE

The shallow upper case is positioned over the gap in the case top. This adds the height necessary to accommodate a large TV. The step-back design allows a lower viewing angle and makes for a more pleasing appearance.

The upper case is built as a four-sided plywood box with a false drawer assembly applied to the front. A top with an integral hinged lid allows the TV to rise from its compartment.

GETTING STARTED. The first thing to do is assemble the plywood box. This is accomplished with pocket hole joinery. I began by cutting all the pieces to size.

Note that the back piece is narrower than the front and sides (detail 'c'). A recess created at the top will be filled with a solid-wood hinge rail. And even though the grain direction of the front and back runs horizontally, you want the grain direction of the two sides to run vertically.

Next comes a stint drilling multiple pocket screw holes. These will be used to fasten the parts to each other, the upper case to the lower case, and the top to the upper case. All but the back need holes on *both* the upper and lower edges. The back has holes only on the lower edge. You'll also need to drill holes in the ends of the front and back (detail 'a').

Once all the pocket screw holes were drilled and the case assembled, I added a few auxiliary parts. As I mentioned, a 1½"-wide hinge rail is fit across the back (detail 'c'). You'll also need to install a pair of lid stops flush with the top edges of the sides.

FALSE FRONTS. The false drawer assembly serves to disguise the unique function of the upper case. It's an easy addition.

How-To: Make the Upper Case Top & Lid

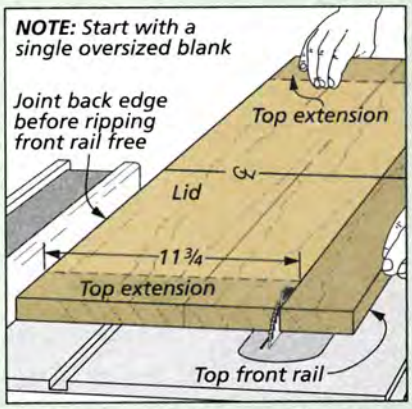

Rip First. *Joint the back edge of the oversize panel and then rip the lid section to the width of the extensions.*

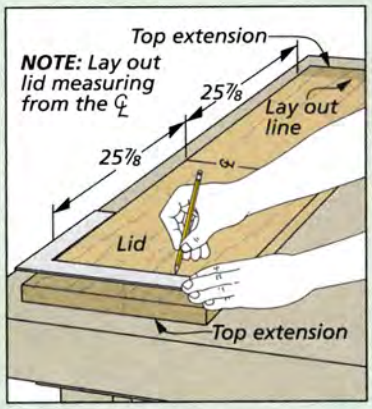

Lay Out Lid. *Next, lay out the final length of the lid through the center of this section.*

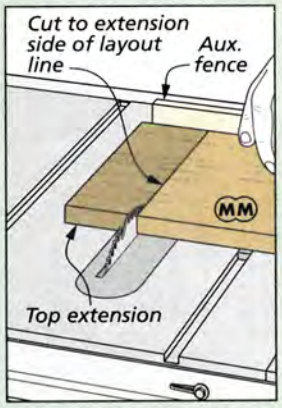

Cut Lid. *Now, trim the lid to length with a single cut on each line.*

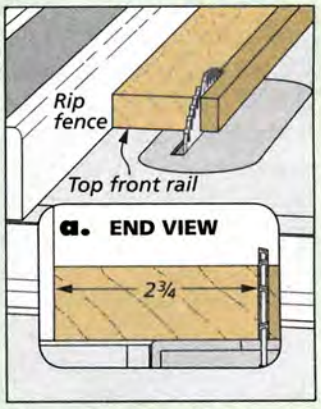

Rip Front Rail. *Rip the front rail to width before reattaching the extensions.*

The first step is to frame in the three openings with ¾" square pieces. I fit and glued the short ends first, followed by the top and bottom rail. Complete the job by adding the two dividers. They're located to create equal openings.

The drawer fronts are cut from ¾"-thick stock and sized for a 1/16" gap all around. Before gluing them to the case front, I drilled pilot holes for the centered pulls and also drilled larger corresponding holes in the case front. These allow you to install the pulls after the fronts are glued on.

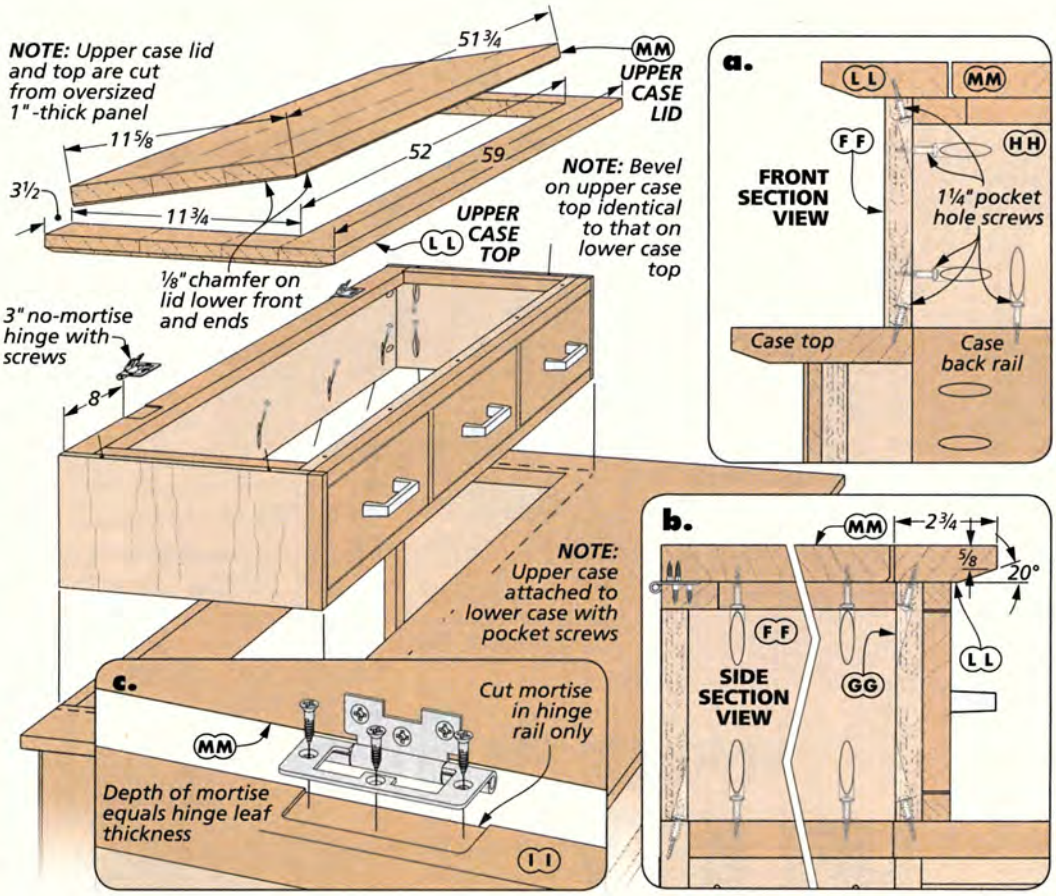

TOP & LID

Making the top with its hinged lid will complete the upper case. It's assembled somewhat similar to the lower case top, but with a twist. The How-To box starting on the preceding page shows how the top and lid can be cut from a single panel to create a perfect figure match across the assembly.

I started by gluing up and surfacing a panel about 1" oversized in width and 2" in length. After jointing the back edge, you can start cutting the panel into pieces as shown. In brief, you'll rip the panel to create a lid/extension section and a front rail. Then after crosscutting the extensions from the lid, you'll glue them back onto the front rail. Finally, the top and lid are trimmed to exact size before both get a profile — a routed bevel on the underside of the top and chamfer on the underside of the lid (details 'a' and 'b').

INSTALLATION. Once the top and lid were completed, you can start adding the upper case to the lower case. First, clamp the case over the rear opening and install the pocket hole screws that hold it in place. Then, clamp the top to the case before attaching it with pocket hole screws.

THE LID. The lid is attached to the upper case with a pair of no-mortise hinges. But in order for the lid to sit flush with the top, I had to set the hinges in shallow mortises cut in the hinge rail, as shown in detail 'c.' I installed the hinges in the mortises, then attached the lid. Aim for an even gap all around.

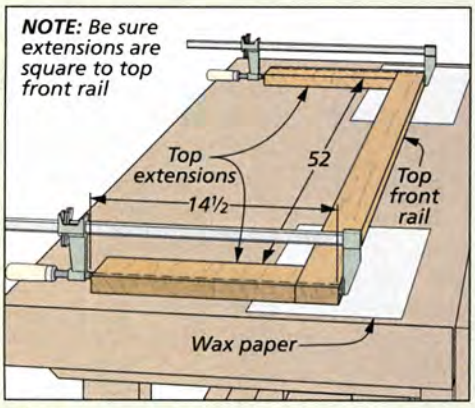

Glue Extensions. *When gluing the extensions onto the rail, make sure the figure aligns and the lid gap is accurate.*

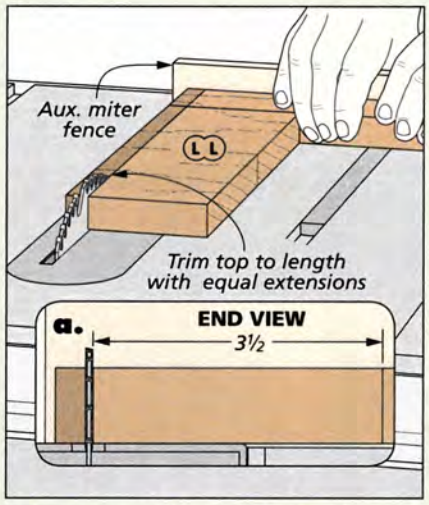

Trim Top to Length. *Once the glue is dry, trim the top to final length with an equal extension at each end.*

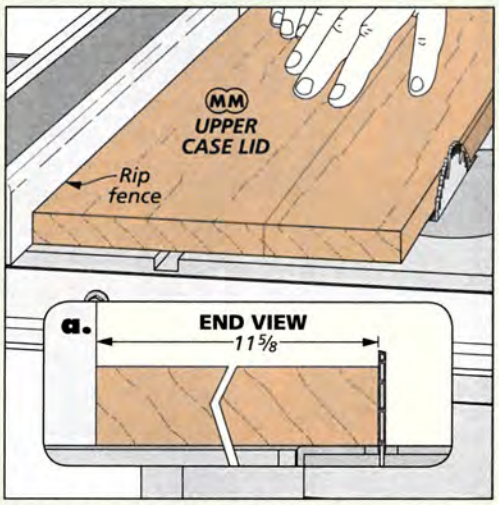

Trim Lid to Final Width. *To create a clearance gap for the lid, you'll need to trim ⅛" from the front edge of the panel.*

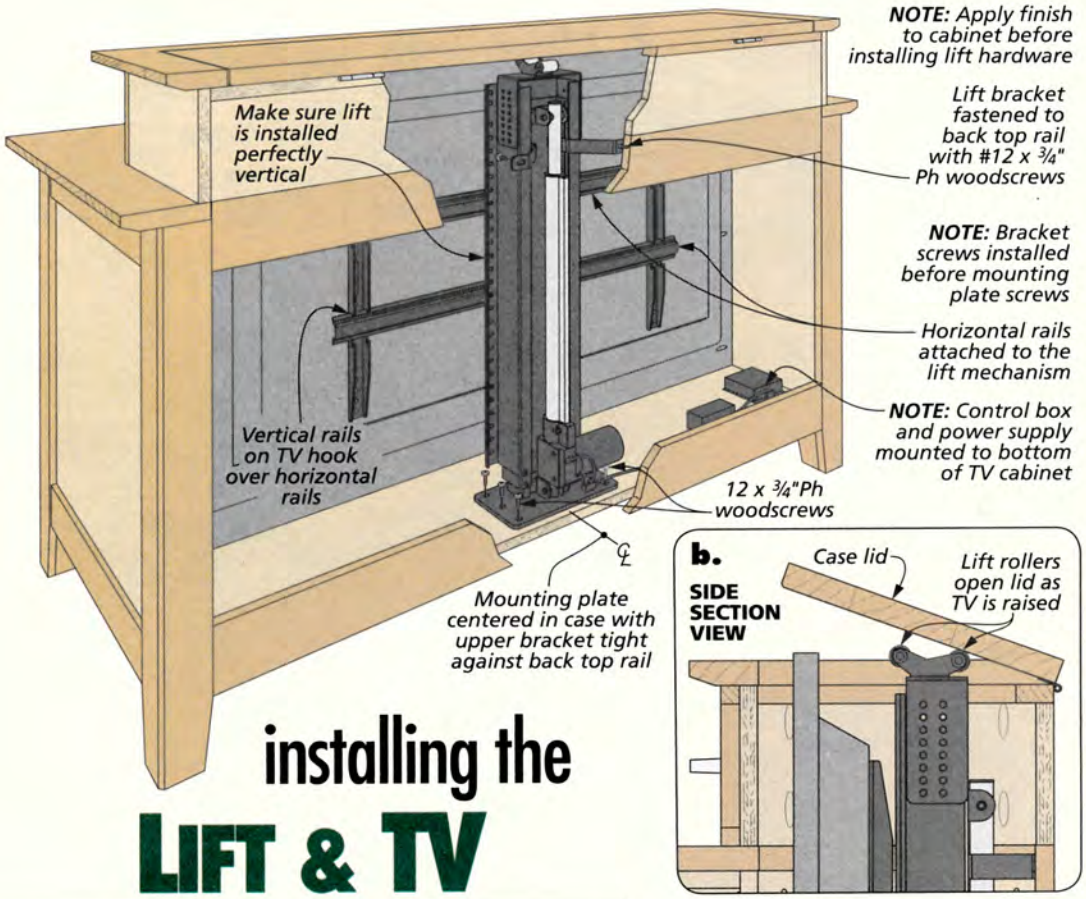

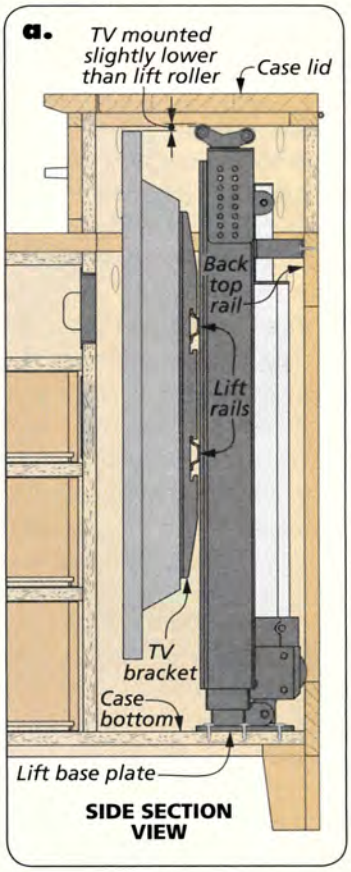

installing the LIFT & TV

The cabinet is now complete except for a couple of very important components — the TV and the lift that carries it. But these final steps are a piece of cake.

Before adding the lift and TV, you'll want to apply a finish to the cabinet. And as you can see in the photo at right, I stained and finished the TV compartment — just for the sake of tidiness.

THE LIFT. The lift is installed in the cabinet before the TV is mounted to it. The main drawing and detail 'a' show how the lift is attached by means of a mounting plate at the bottom and a rear facing bracket at the top.

First, I centered the lift side-to-side with the bracket tight against the upper frame rail. Then I drilled pilot holes for the panhead screws and installed them. Finally, I made sure the lift was perfectly vertical before installing screws through the bottom mounting plate.

THE TV. Mounting the TV on the lift is equally easy. As you can see in the photo at right, the hardware consists of a pair of horizontal rails that attach to the lift and a pair of vertical brackets that you'll attach to the TV. Once the parts are in place, the TV brackets simply hook over the rails. The TV should be positioned with the top edge slightly below the lift's rollers (detail 'a'). Then, when everything is ready and you push the button, the cabinet lid will slowly swing open and the TV will magically appear. W

▲ The TV lift includes both a wireless (above) and a hard-wired remote.

▲ The open back of the case allows easy installation of the lift mechanism.

Materials, Supplies & Cutting Diagram

A	Case Sides (2)	3/4 ply. - 25 1/2 x 27 1/4
B	Case Bottom (1)	3/4 ply. - 25 1/2 x 57 1/2
C	Case False-back (1)	3/4 ply. - 26 x 57 1/2
D	Case Top/Shelf (2)	3/4 ply. - 13 3/4 x 57 1/2
E	Shelf Dividers (2)	3/4 ply. - 8 1/2 x 5
F	Edging (1)	3/4 x 1/4 - 96 rgh.
G	Vertical Dividers (2)	3/4 ply. - 13 3/4 x 19 1/2
H	Horizontal Dividers (2)	3/4 ply. - 13 3/4 x 17 1/2
I	Adjustable Shelves (4)	3/4 ply. - 13 x 19
J	Front/Back Stiles (4)	3/4 x 3 - 31 1/4
K	Front Bottom Rail (1)	3/4 x 1 1/4 - 54
L	Face Frame Edging (1)	3/4 x 3/4 - 340 rgh.
M	Back Rails (2)	3/4 x 4 - 54
N	End Stiles (4)	1/2 x 2 3/4 - 31 1/4
O	End Rails (4)	3/8 x 3 - 21
P	Foot Fillers (4)	2 1/4 x 2 1/2 - 4 1/2
Q	Top (1)	1 x 28 1/4 - 64
R	Upper Drawer Front (1)	3/4 x 4 7/8 - 17 3/8
S	Upper Drawer Sides (2)	1/2 x 4 7/8 - 14
T	Upper Drawer Back (1)	1/2 x 4 7/8 - 16
U	Drawer Bottoms (3)	1/4 ply. x 13 1/2 - 16
V	Middle Drawer Front (1)	3/4 x 5 7/8 - 17 3/8
W	Middle Drawer Sides (2)	1/2 x 5 7/8 - 14
X	Middle Drawer Back (1)	1/2 x 5 7/8 - 16
Y	Lower Drawer Front (1)	3/4 x 6 7/8 - 17 3/8
Z	Lower Drawer Sides (2)	1/2 x 6 7/8 - 14
AA	Lower Drawer Back (1)	1/2 x 6 7/8 - 16
BB	Door Stiles (4)	3/4 x 2 1/2 - 19 3/8
CC	Door Rails (4)	3/4 x 2 1/2 - 14 3/8
DD	Glass Stop (1)	1/4 x 1/4 - 120 rgh.
EE	Door Stops (2)	3/4 x 1/2 - 19 5/16
FF	Upper Case Sides (2)	3/4 ply. - 12 1/2 x 6 1/2
GG	Upper Case Front (1)	3/4 ply. - 6 1/2 x 54
HH	Upper Case Back (1)	3/4 ply. - 5 3/4 x 54
II	Hinge Rail (1)	3/4 x 1 1/2 - 54
JJ	Lid Stops (2)	3/4 x 1 1/2 - 10 1/4
KK	Upper Case Dwr. Fronts (3)	3/4 x 4 7/8 - 17 3/8
LL	Upper Case Top (1)	1 x 14 1/2 - 59
MM	Upper Case Lid (1)	1 x 11 5/8 - 51 3/4

- (1) TV Lift Mechanism
- (2) 1 1/4" Dia. Knobs
- (6) 128mm Pulls
- (3 pr.) 14" Full-Extension Slides
- (1 pr.) 3" No-Mortise Hinges
- (12) #4 x 5/8" Hinge Screws
- (3) Access Grommets
- (2 pr.) Euro-Style Inset Hinges
- (16) 1/4" L-Style Shelf Supports
- (2) 13" x 15" Frosted Glass Panels
- (41) #8 x 1 1/2" Fh Woodscrews
- (79) 1 1/4" Pocket Hole Screws
- (8) #12 x 3/4" Ph Woodscrews

3/4" x 7" - 72" Cherry (3.5 Bd. Ft.)

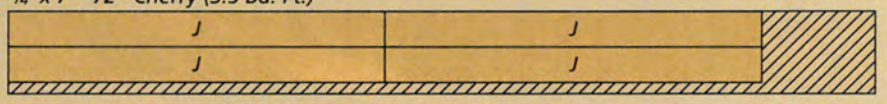

3/4" x 7" - 72" Cherry (3.5 Bd. Ft.)

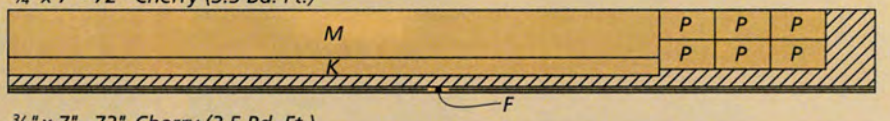

3/4" x 7" - 72" Cherry (3.5 Bd. Ft.)

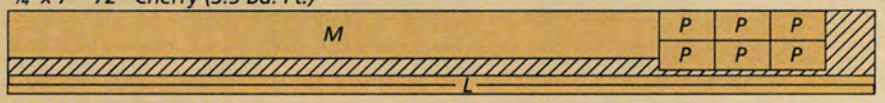

3/4" x 7" - 72" Cherry (3.5 Bd. Ft.)

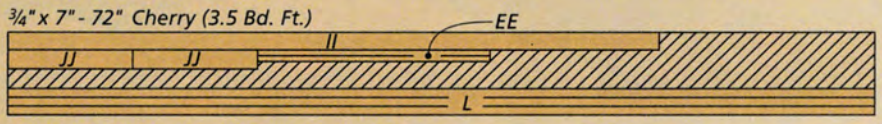

3/4" x 7" - 72" Cherry (3.5 Bd. Ft.)

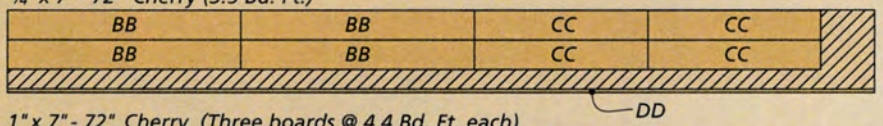

1" x 7" - 72" Cherry (Three boards @ 4.4 Bd. Ft. each)

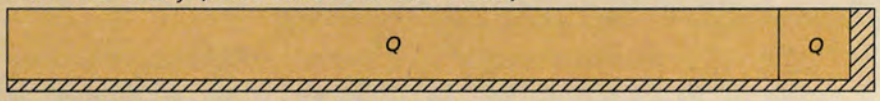

1" x 7" - 72" Cherry (Three boards @ 4.4 Bd. Ft. each)

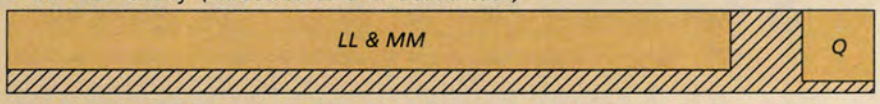

3/4" x 7" - 72" Cherry (3.5 Bd. Ft.)

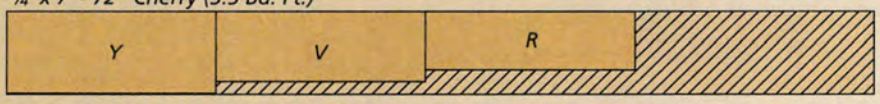

3/4" x 7" - 72" Cherry (3.5 Bd. Ft.)

1/2" x 7" - 72" Cherry (3.5 Sq. Ft.)

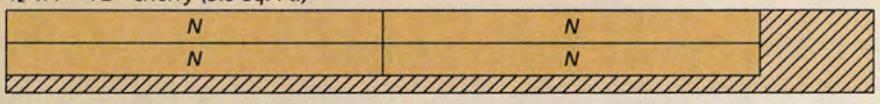

1/2" x 7" - 60" Cherry (3.0 Sq. Ft.)

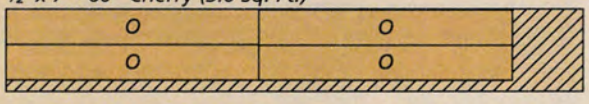

1/2" x 7" - 60" Hard Maple (2.9 Sq. Ft.)

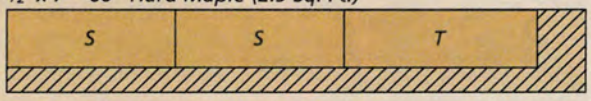

1/2" x 7" - 60" Hard Maple (2.9 Sq. Ft.)

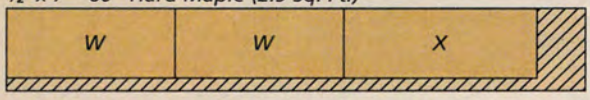

1/2" x 7" - 60" Hard Maple (2.9 Sq. Ft.)

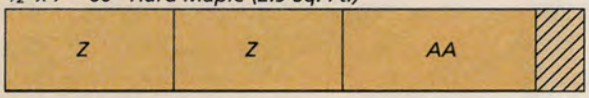

ALSO NEEDED: *Two 48" x 96" Sheets of 3/4" Cherry Plwood*
One 48" x 48" Sheet of 3/4" Cherry Plwood
One 24" x 48" Sheet of 1/4" Maple Plwood

shop-tested

Jointer Techniques

Using a jointer looks fairly straightforward. But there are still a few things you need to learn to get the most from this essential tool.

One of the first tasks in building a successful project is getting your stock flat and square. Traditionally, this called for a hand plane and an afternoon's worth of hard work. Today, most of us rely on a jointer and a planer to do the bulk of the work. But unless you understand how a jointer works, how to tune it up properly, and the right techniques for using it, you might not always get the results you were hoping for.

In order to get you started, I'll take you through the steps I use to make sure the tool is in good working order and ready to run. After that, I'll walk you through some techniques you can use to get the best outcomes.

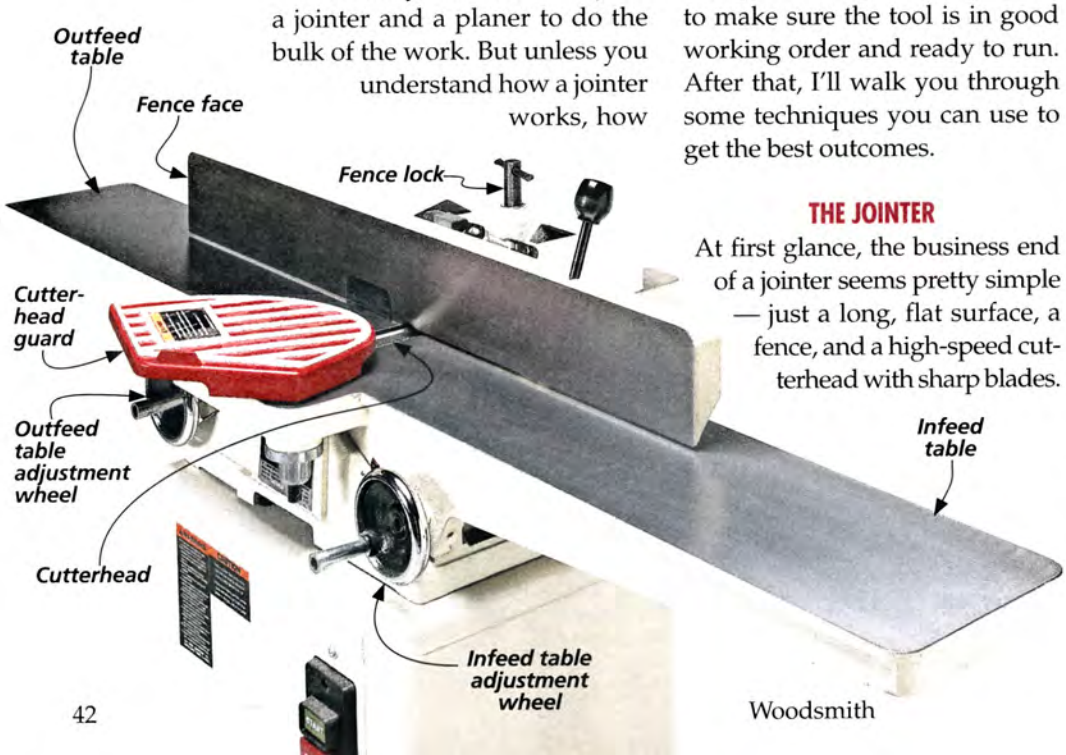

THE JOINTER

At first glance, the business end of a jointer seems pretty simple — just a long, flat surface, a fence, and a high-speed cutterhead with sharp blades.

INFEED & OUTFEED TABLES. A closer look reveals that the long surface is actually two separate tables: The infeed table, where you move the workpiece into the cutterhead, and the outfeed table, where the workpiece ends up after jointing. (See the photo at left to help you identify the parts.) The relationship between the two surfaces is critical for getting flat stock, so that's where to start a jointer tune-up.

The top left drawing on the opposite page shows how you can use a straightedge to check that the two tables are parallel. After unplugging the jointer, remove the cutterhead guard. Now, level the tables and lay the straightedge lengthwise along them.

If the tables aren't coplanar, consult your owner's manual to make the necessary adjustments. Check in several points across the width to make sure they're level.

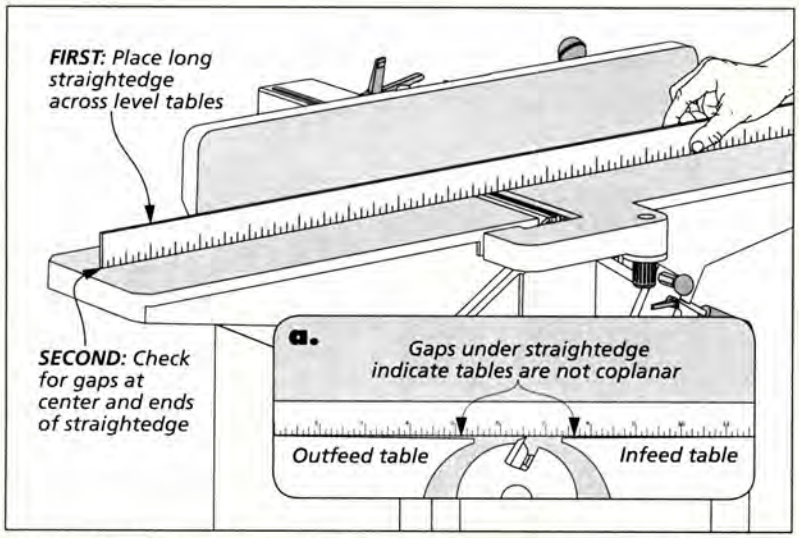

Parallel Tables. *To joint a straight edge on a workpiece, the infeed and outfeed tables need to be parallel. Placing a long straightedge across the tables is a sure way to find any potential problems.*

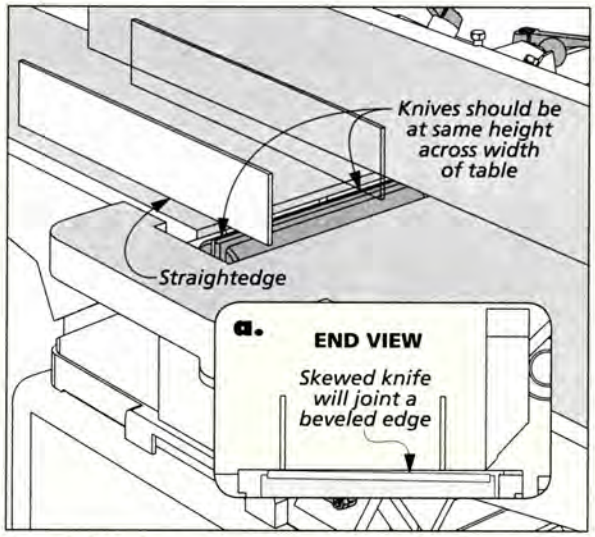

Parallel Knives. *You'll also need to check the height of the knives. For a square cut, all the knives should be the same height and parallel to the surface.*

The most common problems you'll encounter are either a convex or concave edge on your workpieces. The concave edge is a result of the infeed or outfeed table sagging at the end. (This will show up as a gap on the end of the straightedge.) A convex edge means the infeed table is lower near the cutterhead than on the end.

THE KNIVES. The next thing to check are the knives. The knives must all be at the same height as the outfeed table in order to put a straight edge or face on your workpieces. If your workpiece looks choppy or excessively scalloped, chances are the knives need to be adjusted.

The right drawing above and the one directly below it show how you can use a straightedge to check that the knives are all at the same height. Detail 'a' shows the importance of checking the knife along its full length to make sure it's not lower on one end. (This results in a beveled edge on your workpiece.)

Once again, you'll need to consult the owner's manual, but in most jointers the knives are held in place by a set of gibs in the cutterhead. A wrench is used to loosen the gibs, so you can make the necessary corrections. Check each of the knives to ensure they're all at the same height. (There are two or three knives on the cutterhead.)

The middle drawing shows the perfect final result. When the cutterhead is rotated so one knife is at the highest point of the arc, it should just graze the straightedge.

DEPTH OF CUT. With the knives on the cutterhead all set at the same height, you can adjust the outfeed table to match. Then you can set the infeed table height to be just a hair lower. This gap is the depth of cut the jointer will take on each pass. In fact, you set the depth of cut by moving the infeed table up or down.

A good setting for everyday use is between 1/32" and 1/16". By setting the jointer to 1/32", you'll take a fairly light cut. This shallow cut also helps keep the tearout to a minimum. At 1/16", the cut will be more aggressive, and more prone to tearing the wood.

Another common problem that requires adjustment is snipe, when the jointer takes a deeper cut on the end of a workpiece. You can usually remedy snipe by adjusting the outfeed table.

THE FENCE. The next order of business is to check the fence. For most work, you'll want the fence to be at 90° relative to the infeed and outfeed tables. This way, you can hold the workpiece against the fence and joint a square edge.

This is a pretty simple adjustment. All you need to do is place a square on the table and against the fence. The bottom drawing, above, shows what I mean. Make sure the table is clean when you check it.

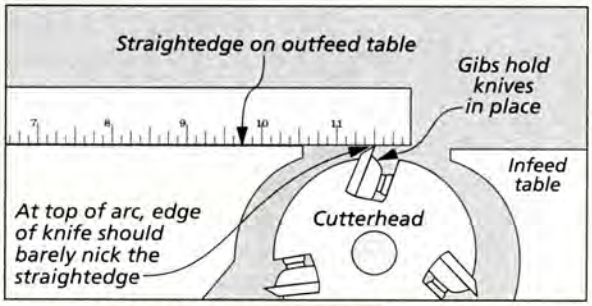

Check Outfeed Table Height. *When checking the height of the outfeed table, the knife should make very light contact at the top of its arc.*

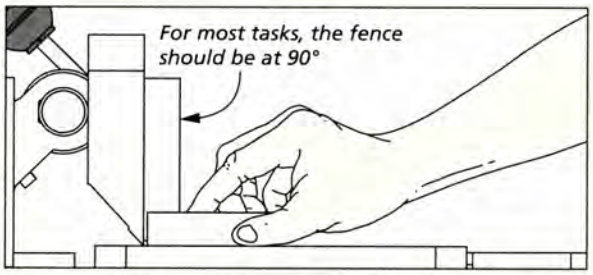

Square the Fence. *Use a small square to set the fence to 90°. It's a good idea to check it at multiple points in front of and behind the cutterhead.*

OTHER ADJUSTMENTS. In addition to checking these basic functions, consult your owner's manual for any additional routine maintenance your jointer might require.

Finally, I clean out the shavings from the cabinet and dust chute. Jointing is a messy business, and this makes it a bit cleaner.

▲ The left hand is primarily used to keep the workpiece tight against the fence, pushing down lightly.

▲ At the midpoint, downward pressure should be roughly equal on the front and back.

▲ After crossing the midpoint, most of the downward pressure should be focused on the outfeed end.

▲ Notice how the grain runs "downhill." This is the correct orientation when feeding the workpiece.

EDGE JOINTING

Edge jointing is the operation most of us are familiar with. Chances are, it's the reason you bought a jointer in the first place. This is the first step in milling your lumber. Joint one edge, then rip the opposite edge parallel at the table saw. But there are still a few things to keep in mind as you go.

GRAIN DIRECTION. The first thing to consider as you prepare your stock for jointing is the direction the grain runs throughout each workpiece. To avoid tearout, keep the cutterhead working with the grain, not against it. Even sharp blades will cause tearout if the orientation of the workpiece in incorrect. The photo at left illustrates this point. The grain runs "downhill" into the cutter, facilitating a clean cut.

Usually the grain direction is pretty obvious. But when it's not, just make your best guess. If the results are rough, try flipping the workpiece for the next pass.

CUT DEPTH. As I said earlier, I usually set the cutting depth on my jointer to roughly 1/32". This setting yields a smooth cut, and it also helps the edges of the knives last a little longer between sharpenings.

The exception is when working with rough lumber. In that case, I don't mind taking a more aggressive cut until I have one flat edge and face. This way, even if I get a little tearout, it will be cleaned up later, either with a subsequent finishing pass at the jointer or at the thickness planer. Remember that you can also adjust the feed rate to find the best result. Experience will be your guide.

JOINTING THE EDGE. With the depth of cut set and the feed direction determined, you're ready to joint the workpiece. The trick here is to keep the face against the fence (keeping the edge square) while applying downward pressure on the correct part of the workpiece. The three photos above show the basic technique.

Start with pressure over the leading edge of the workpiece as you move it into the cutterhead. As you're making the cut, slowly transfer that pressure to the outfeed end as more of the workpiece crosses over the cutterhead. In neither case should you apply a great deal of force to the workpiece. Your efforts should just be directed at keeping the edge in firm contact with the infeed or outfeed table.

Once you have a smooth edge, it's still a good idea to make one more pass. For this final pass, reduce your feed rate to about half the speed of the previous passes. This slower motion will leave a smooth edge, without the ripples often seen with the faster passes. The slow pass is especially important if you're edge jointing pieces for a glueup. The smoother edge makes for a stronger joint.

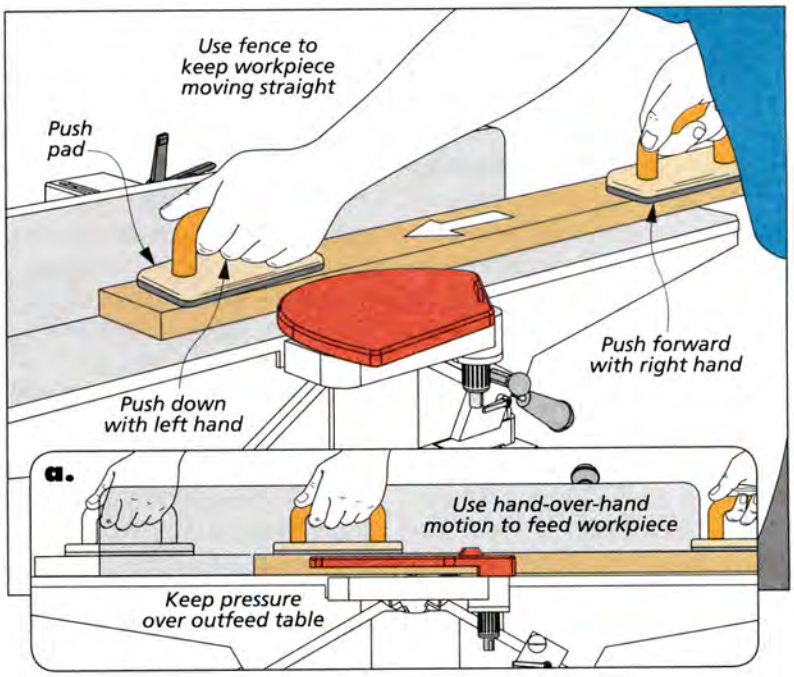

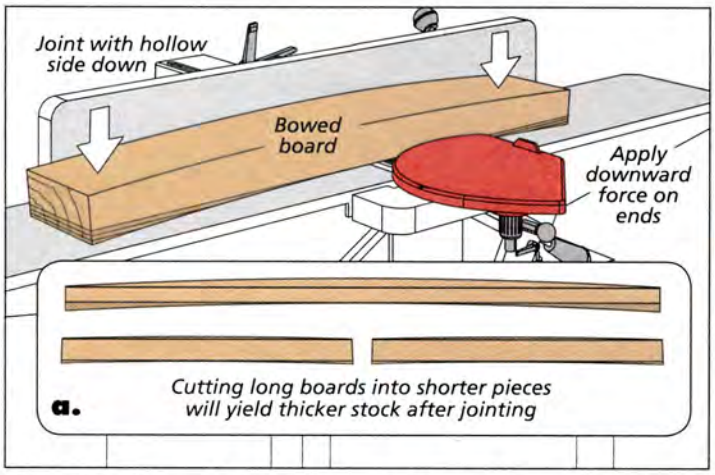

Straightening a Bow. *Start straightening bowed stock with multiple cuts at each end. Avoid pushing down on the center.*

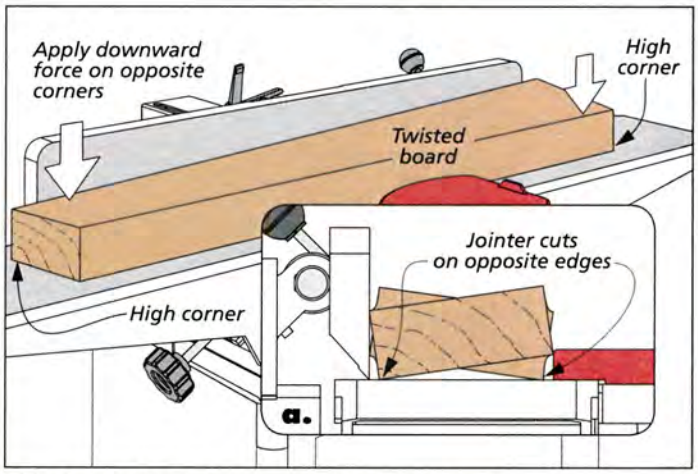

Eliminate the Twist. *To get rid of twist in a board, you need to push down on the opposite "high" sides as you joint the face.*

FACE JOINTING

The second task in stock preparation is face jointing your workpieces. This is an important step that many woodworkers skip. It gives you a flat reference face, so you can plane the opposite side parallel using your surface planer.

If you rely on S4S lumber (surfaced on all four faces and edges) for your project, and it's nice and flat, then this may not be necessary. But a careful inspection of each piece is still important. More often than not, even the priciest lumber needs to be jointed before it can be used in a project.

THE SAME RULES APPLY. As you set out to face joint your stock, the same rules you used when edge jointing apply. First, inspect the workpieces for grain direction. This can often be a bit more challenging than when edge jointing. This time, you need to look at the edge of the board to determine grain direction. As before, make your best guess and proceed.

The illustration at the bottom of the opposite page shows how to maintain the same feed motion as before while relying on a pair of push pads for safety. And the box below shows an easy fix for another very common problem — nicked knives.

CORRECTING BOWED STOCK. No matter where you buy your lumber, chances are you'll still end up with some stock that needs to be corrected. Bowed stock is the most common. The left drawing above shows how to joint it by nibbling off the ends first. In detail 'a' you can see how it might be of benefit to simply cut bowed stock for smaller pieces to save jointing it all away.

TWISTED STOCK. Twisted stock should be avoided at the lumberyard whenever possible. It can be a tricky process to flatten it. But when you have no alternative, the right drawing above shows the technique for fixing it. Light passes are the key.

I think you'll find that a properly tuned jointer plus these techniques will help you get the most out of this important tool. W

Troubleshooting: Nicked Knives

Sooner or later, one thing you're likely to encounter with your jointer is a nick in the knives. The result is a slight ridge in the workpiece, like the one in the far right photo. Most high-speed steel knives are fairly easy to damage, so it doesn't take much to take a small "bite" out of them. A knot, a spot of dried glue, or even just some tough grain can be hard enough to cause the damage.

Before you pull them all out for sharpening or replacement, however, there's a simple fix that might help. Try shifting one of the knives to the left or right. Just loosen the gib and move the first knife over slightly, offsetting it from the others. This way, the ridge left by the nick in one is taken care of by the other knives.

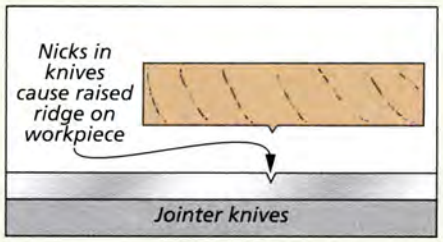

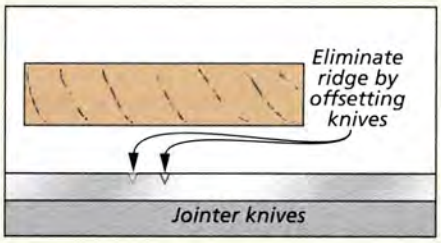

▲ A raised ridge in the workpiece means the knives have been damaged.

making minor Finish Repairs

Being the first line of defense, a finish is bound to suffer a little wear and tear. But simple fixes can easily repair the damage.

Maybe the most important job of the finish applied to a project is protection of the wood. Ideally, the finish absorbs the punishment to protect the wood below. Consequently, even the most durable finish may suffer over time.

The result may simply be a surface scratch, a small ding, or a worn edge. Watermarks are all too common, and with long use a finish may become scuffed and a little "tired" looking. This kind of minor damage is virtually inevitable. But you don't have to just live with it. There's usually a way to repair or at least disguise the problem without a great deal of effort. I'll start with the basic fixes and work up from there.

▼ A small repair kit will go a long way toward fixing minor finish blemishes.

SURFACE SCRATCHES. Scratches can take two forms. Sometimes they appear only as slight depressions in the finish film. These are usually only noticeable when viewed with raking light. So I don't worry too much about them.

Scratches that tear the film or even penetrate to the wood are going to be more noticeable. This type of scratch usually appears lighter than the background color and, consequently, stands out.

SCRATCH FIXES. The trick to hiding deep scratches is to color them to blend in with the background. This alone is usually enough to greatly improve the appearance.

If there are numerous scratches over a surface, you can use a shotgun approach and apply a coat of tinted paste wax (right photo above). The wax will settle into the scratches and make them much less noticeable.

▲ A coat of tinted paste wax will hide minor scratches and restore an even sheen.

When just one or a few scratches are present, the goal is touchup. This can be done a couple of ways. Often times, a wood stain applied with a fine brush will do the trick. An easier method is to use a touchup pen, as shown in the main photo. These are similar to a felt-tip marker and come in a variety of colors.

WORN EDGES. Tabletop edges, table legs, and other exposed edges receive more than their fair share of abuse. The finish

can easily be nicked, abraded, or even worn away, exposing areas of raw wood. This kind of damage can be treated similarly to a scratch. Simply use stain or a touchup pen to blend the lighter-colored worn areas into the background (photo below).

GOUGES & DINGS. Sometimes damage goes deeper, leaving a gouge or serious ding in the wood. In this instance, you may want to fill and level the blemish as much as possible. The key is to do this without damaging the surrounding finish. And as you might guess, there are post-finish fillers made for exactly this purpose.

▲ The worn edge of a table leg can be colored in to match the surrounding wood.

One type comes in the form of a waxy stick (like a crayon). You rub it over the ding or gouge to fill it in and then clean the surrounding area to remove any excess, as shown in the photo at right.

A second option is a soft, non-hardening putty. This is a good choice for larger areas. You can push it into the depression with your finger or other non-abrasive implement. Both types come in a variety of colors.

WATER SPOTS. The light-colored watermarks or rings left by condensation or a spill can often be rubbed out. With a pad of #0000 steel wool, scrub lightly over the spot until the clarity of the film is restored (right margin photo). Once the mark has been removed, you can wax the entire surface to even out the sheen.

A WORN FINISH. Over time, a finished surface that sees a lot use, such as a tabletop, will inevitably become scuffed, worn, and lose its even sheen. Rather than strip the finish and start over, there are a couple of easier options.

If the wear is light, an easy route is to simply rub out the finish thoroughly with #0000 steel wool and then buff it with paste wax to a desirable sheen.

When the wear is more extensive, an overcoat of the original finish may be called for. This is an especially good option for surfaces finished with a thin-film finish such as oil, an oil/varnish mix, or a wiping varnish.

First, you need be sure of the original finish to avoid compatibility problems. If you applied the finish, this won't be a problem. Otherwise, you can test it with the appropriate solvent in an inconspicuous spot — alcohol for shellac, lacquer thinner for lacquer, and so forth.

Once this is established, the rest is easy. The box below shows the procedure.

I'll close with a final bit of advice: I always try the simplest and easiest options first. Refinishing a project is no fun and always my last resort. W

▲ Rub the stick across the blemish to fill it, then wipe away the excess.

▼ A water spot or ring can often be rubbed out with steel wool.

How-To: A Quick Overcoat

▲ Start by sanding the surface with 220-grit paper to level it and remove minor blemishes.

▲ Next, use a rag dampened with mineral spirits to remove waxes or polishes that might remain.

▲ The final step is to apply a coat of the original finish. Sometimes, a second coat may be necessary.

mitered shoulder

Through Dovetails

Sometimes two joints are better than one. You'll find that this twist on through dovetails can be a handy problem solver.

Two of the most useful ways to join solid-wood workpieces in a square corner are through dovetails and a simple miter joint. Each of these joints has its advantages. Dovetails offer the ultimate in strength and rigidity and also lend a desirable handcrafted look to a project. On the other hand, a miter joint produces a clean look with no exposed end grain. This allows molded profiles or other details to be formed along the workpieces with a seamless result.

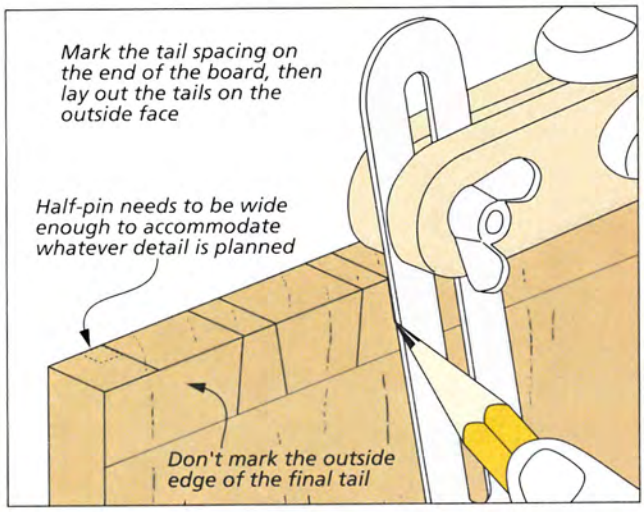

If there was just a way to combine the benefits of through dovetails and a miter into one joint, you might have the perfect woodworking joint — at least for a few specific applications.

As you might guess, there is such a joint — the mitered shoulder dovetail. It's been employed by craftsmen for generations to solve certain construction problems. I'll explain how the joint works, then where it can be used.

WHAT IS IT? A mitered shoulder dovetail looks like a joint made by a woodworker with a serious case of indecision. Standard through dovetails are used across most of the width of the workpieces. However, at one (sometimes both) edge, the dovetails give way to a miter, as seen in the photo above. The appearance can be pretty neat and even a little mysterious to those who don't know the simple secret.

WHERE & WHY? The next question is, "Where would you use this joint, and why?" Although not a widely applied joint, there are a few instances in which it comes in very handy, as demonstrated in the photo above and those in the opposite margin.

When building a box, you'll often need to cut a rabbet or groove around the inside edges to hold a top or bottom. If the box is dovetailed, the ends of the rabbet or groove create a gap. The solution is to use mitered shoulder dovetails. The rabbet or groove is concealed by the mitered edges.

Another instance in which a mitered shoulder dovetail comes in handy is when wrapping a chest with base boards. The advantage is easy to see.

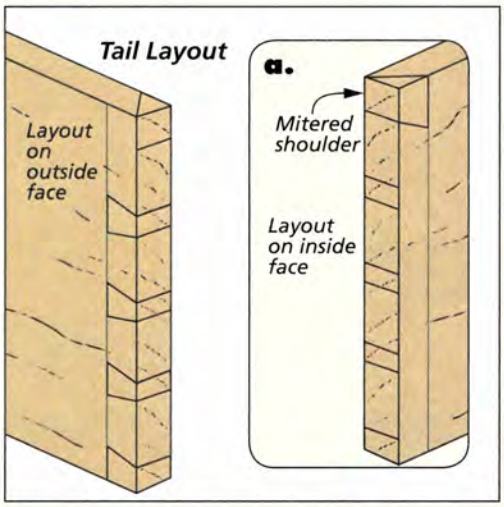

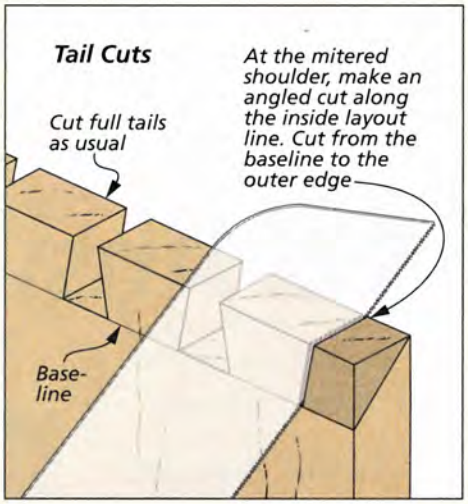

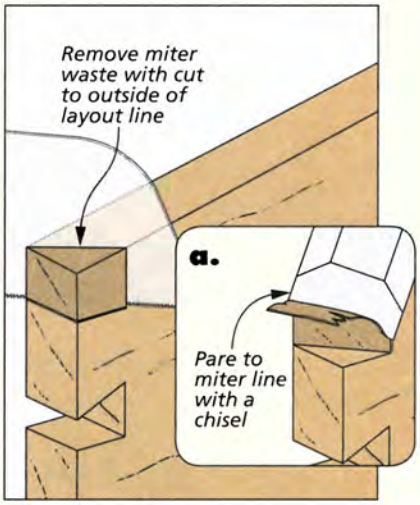

The dovetails provide a strong connection while the mitered edges allow you to add a molded profile with perfect continuity.

HOW? Now, let me assure you that making a mitered shoulder dovetail isn't as difficult as you might think. Once you understand the layout, cutting the joint is pretty straightforward. I'll give you a short course.

TAILS FIRST. You'll lay out and cut the tails first. From both a layout and execution standpoint, this is the trickiest part of the joint. Begin by scribing the baseline on the faces and the non-mitered edge of the tail board as usual.

Next, lay out the tail spacing on the end of the tail board (drawing on opposite page). There's one thing to keep in mind. The half-pin at the mitered edge needs to be wide enough for the purpose at hand. If a profile is going to be routed on the edge, start with a half-pin that's equal to or greater than the width of the profile. The same goes for a groove or rabbet.

After squaring across the top of the tail board, mark the tails down the outside face. But don't mark the outside edge of the final (mitered) tail. Mark this tail on the inside face of the piece. Then scribe the miter line on the edge from the inside baseline, as in the left illustration above.

Now, except for the mitered tail at the edge, the joint is cut in the standard way. Saw down the layout lines and chisel out the waste. At the mitered tail, make an angled cut along your inner layout line from the baseline to the outside edge of the piece (upper middle drawing). Then a second cut just to the outside of the miter line removes the waste (upper right drawing). Finally, use a sharp chisel to pare a crisp miter down to the tail cut.

PINS. That's it for the tail board. The pin board is even easier. You'll begin by scribing the baselines. Then you'll use the tail board to mark the pins. Lay it over the end of the pin board and align the edges carefully. With a sharp pencil, mark along the edges of the tails including the mitered tail, as in the left drawing below. Square across the end of the pin board and then, like the tail board, scribe a miter line on the appropriate edge.

Now you're ready to begin cutting the pins. First, you'll saw down the layout lines to the baseline. Next, the tail socket waste is removed with a sharp chisel.

The final step is to cut the miter on the pin. Remove most of the waste with a saw cut just to the outside of the layout line. Then complete the miter with a sharp chisel. Be careful to avoid chipping as the chisel enters the dovetail space (right drawing below).

I always anticipate the need for a little trimming to get a snug fit on both the dovetails and the miter. The key here is to take it slowly. Once you're satisfied with the result, the desired detail can be formed on the mitered section before assembly. W

▲ Mitered shoulder dovetails allow for a seamless profile (top) or a rabbet (bottom) on the mitered edge.

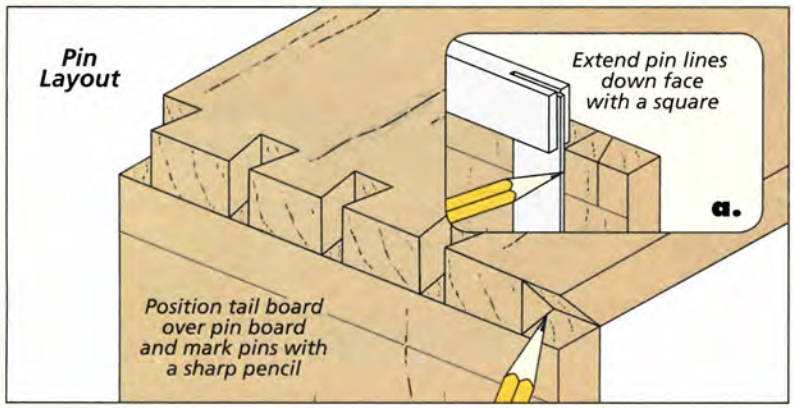

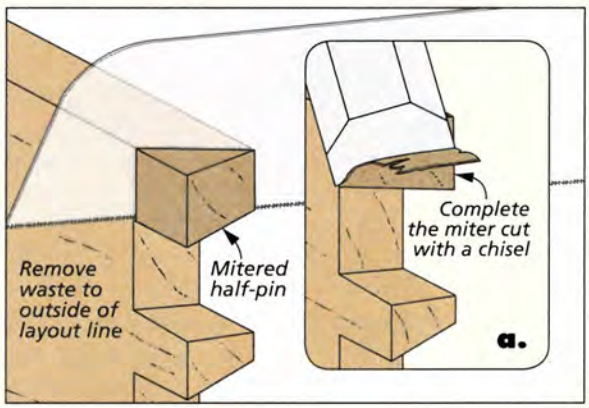

Questions & Answers

Do I Need Variable Speed?

Q ***I'm thinking about upgrading to a variable-speed router. However, I'm not real clear about the benefit. Could you explain?***

Perry Rutledge
Adel, Iowa

A Not too long ago, any router that you purchased would offer only a single speed of well over 20,000 RPM. Today, variable-speed routers are common — and becoming the norm. The reason for this is that routers and router bits have evolved side by side. As more and more woodworkers realized the advantages of mounting their routers in tables, manufacturers responded with a wider range of bit profiles and sizes, along with more powerful routers and variable-speed control.

In essence, speed control allows you to use larger diameter router bits safely, with less strain on the router, and with better results.

RIM SPEED. Let me explain with some basic physics. At a given RPM, the speed of the outer edge of a router bit (rim speed) is a function of its diameter. The larger the diameter of the bit, the greater the rim speed. For example, at 24,000 RPM, the tips of a 3½"-dia. raised-panel bit are traveling at a hair-raising 250 MPH. By contrast, a ¾"-dia. straight bit would be spinning at only 50 MPH (illustrations below).

As you might imagine, a bit traveling too fast can be dangerous and very hard on the router. It also may result in excessive chatter and a rough cut. So the main benefit of speed control is that it allows you to slow things down and match the RPM to the bit size. In fact, most large-diameter router bits include a speed recommendation with the packaging. The chart below provides a general range.

You'll also find that speed control can be useful for controlling burning and tearout. Although here, there is no hard and fast rule. It will depend on the type of wood, the profile, and the depth of cut.

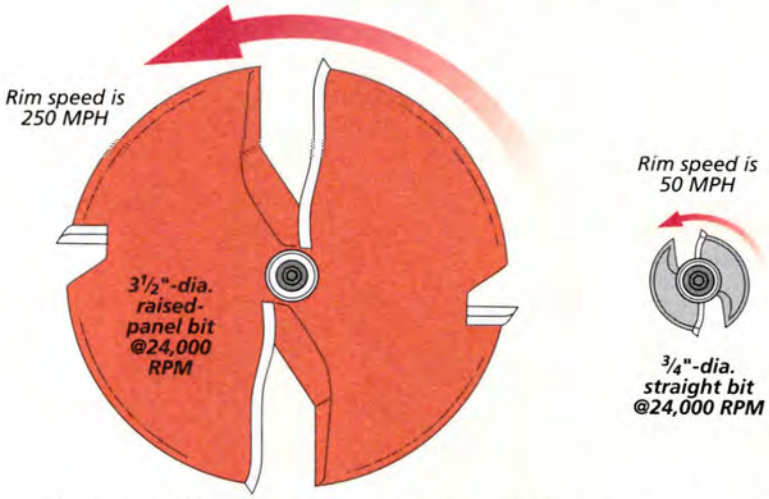

Rim Speed. *At a specific RPM, the rim speed of a router bit is directly related to its diameter. A variable-speed router allows you to match the RPM to the bit size for a much safer and cleaner cut.*

Router Bit Speed Chart

Bit Diameter	Maximum Speed (RPM)
Up to 1"	24,000
1¼" to 2"	18,000
2¼" to 2½"	16,000
3" to 3½"	10,000

hardware & supplies

Sources

Most of the materials and supplies you'll need to build the projects are available at hardware stores or home centers. For specific products or hard-to-find items, take a look at the sources listed here. You'll find each part number listed by the company name. See the right margin for contact information.

The *Woodsmith Store*, in Des Moines, Iowa, is an authorized *Rockler* dealer. They carry many of the hardware items used in our projects. And they ship nationwide. Their customer service representatives are available for your calls from 8am – 5pm Central Time, Monday through Friday.

GLUES *(p.8)*

- **Amazon**
  West System Scale . .B002IZ9FNS

DRILL PRESS *(p.10)*

- **Rockler**
  Drum Sander Kit 42937
- **McFeely's**
  Abrasive Belt Cleaner . . .KA-1000

MAGSWITCH *(p.12)*

- **Rockler**
  Starter Kit 38007
  Thin Stock Jig 36835
  18" Universal Track 38553
  36" Universal Track 38293
  Resaw Guide 29514

OAK NIGHTSTAND *(p.14)*

- **Lee Valley**
  Bronze 96mm Pulls . . . 02A19.42
- **Amana Tool**
  Cove & Bead Bit 49208

The nightstand was stained with *Varathane's Gunstock Oil Stain* and then sprayed with two coats of semi-gloss lacquer.

DARTBOARD CABINET *(p.22)*

- **Lee Valley**
  ½" Magnets 99K31.03
  ½" Magnet Cups 99K32.53
  ⅝" Washers 99K32.63
- **Horton Brasses**
  No-Mortise Hinges. NM-7
  Pantry Latch SL-6

The beadboard back of the dartboard cabinet was painted with *General Finishes' Somerset Gold Milk Paint*. The rest of the cabinet was stained with a mixture of equal parts *General Finishes' Candlelight* and *Brown Mahogany* stains. After that, the entire cabinet was glazed with *General Finishes' Java* gel stain and sprayed with two coats of satin lacquer.

TV LIFT CABINET *(p.30)*

- **Touchstone**
  Whisper Lift II 23202
- **Lee Valley**
  1¼" dia. Knobs 02A17.70
  128mm Pulls 02A17.77
  14" Drawer Slides 02K42.14
  3" No-Mortise Hinges 00H51.24
  ⅝" Hinge Screws 01Z10.52
  Access Grommets 00U09.91
  Inset Hinges 00B15.34
- **Rockler**
  Shelf Supports 33860

The TV cabinet was stained with a mix of equal parts *Varathane Gunstock* and *Early American* oil stains. This was followed with two coats of satin lacquer.

FINISHING REPAIRS *(p.46)*

- **Woodsmith Store**
  Touchup Markers . . . . . .Varies
  Putty Sticks . . . . . .Varies
  Color Putty . . . . . .Varies

MAIL ORDER SOURCES

Project supplies may be ordered from the following companies:

Woodsmith Store
800-444-7527

Rockler
800-279-4441
rockler.com

Amana Tool
amanatool.com

Amazon.com

General Finishes
800-783-6050
generalfinishes.com

Horton Brasses
800-754-9127
horton-brasses.com

Lee Valley
800-871-8158
leevalley.com

McFeelys
800-443-7937
mcfeelys.com

Touchstone
800-215-1990
touchstonehome products.com

Varathane
rustoleum.com

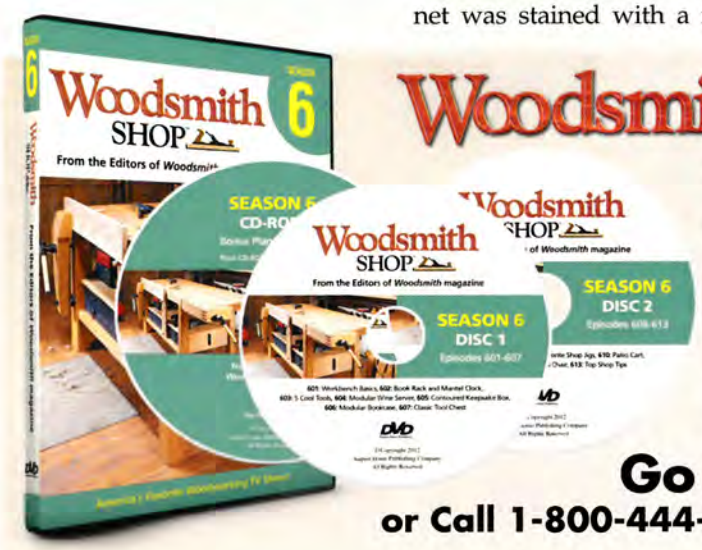

Woodsmith® SHOP DVDs

Get the all new season 6 DVD set of the ***Woodsmith Shop***! The set includes two DVDs with all the episodes plus a CD-ROM with bonus plans and articles. Collect the entire series by ordering individual seasons for $29.95 or save with package deals. Learn more at Woodsmith.com!

DVD Set: Season 6..... $29.95

Go to Woodsmith.com
or Call 1-800-444-7527 Today to Order Yours!

Online Extra

drill press

Table & Fence

An auxiliary table and an adjustable fence are the two best improvements you can make to a "bare bones" drill press. The ones shown above originally appeared in *ShopNotes* No. 38. But we thought this combo was worth revisiting due to the simplicity and effectiveness of its design. This table has been in use in our shop for a lot of years and is one of our favorites.

Let's start with the table. It's much larger than the metal drill press table it's attached to. So it offers plenty of support when working with long pieces.

The table also lays the groundwork for an adjustable fence. To allow positioning of the fence quickly and accurately, it slides along two T-shaped slots in the table. And a pair of flange bolts and knobs lock it in place.

TABLE

The table is made up of two layers. For rigidity, there's a layer of ¾"-thick plywood on the bottom. And a top layer of ¼" hardboard creates a smooth and very durable worksurface.

There's another advantage to this double-layered assembly. The top layer has a removable insert, as shown in Figure 1. When this insert gets chewed up with use, simply slide it in or out to expose a fresh drilling surface. Or replace it with a new insert.

Base. I started on the table by making the plywood base (Figure 1). To form the wide portion of the T-slots, you'll need to cut two dadoes in the base, as in Figure 1a. Later, each of these dadoes will accept the head of a flange bolt that guides the fence in the T-slot.

Install T-Nuts. The next step is to install T-nuts that are used to attach the base to the metal drill press table. To locate the holes for these T-nuts, start by setting the base on the drill press table. Then, after marking the location of the holes from underneath the

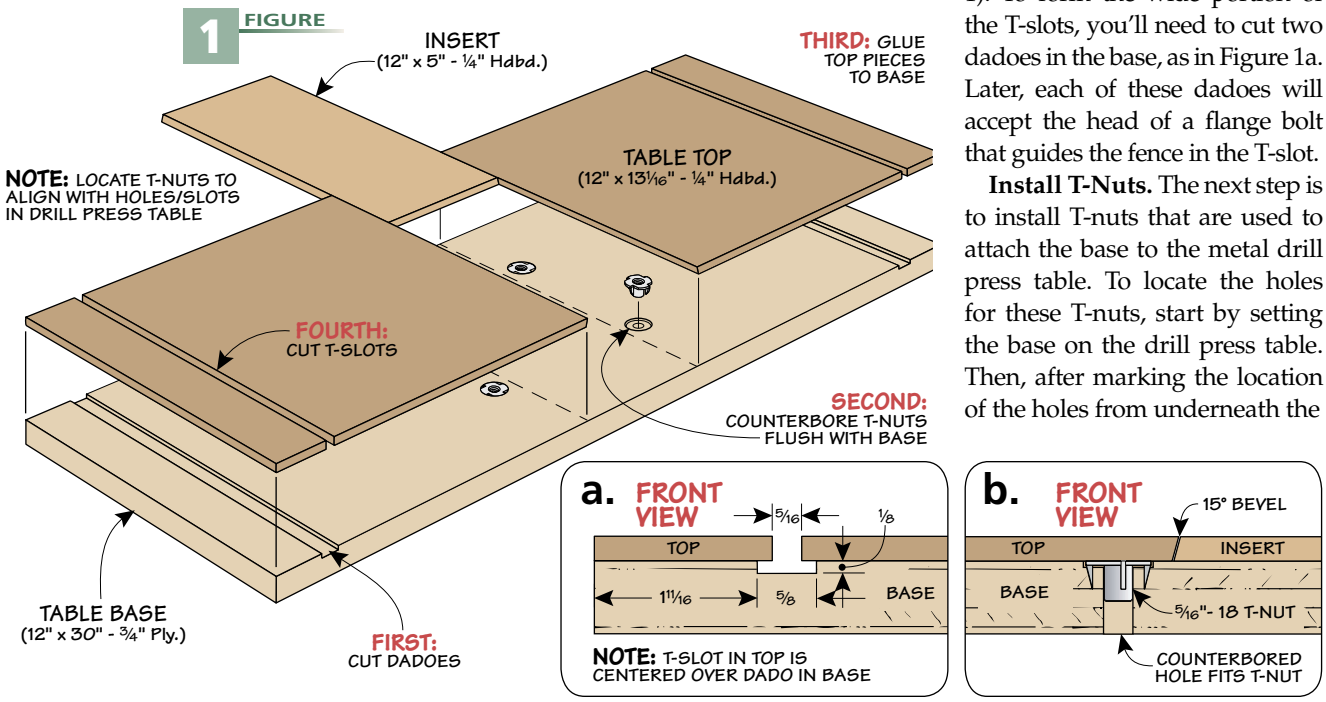

 ©2013 August Home Publishing. All rights reserved.

table, drill counterbored through holes and install the T-nuts.

Top. Now you can concentrate on the top of the table. It consists of two top pieces and the insert (Figures 1 and 3). Note: It's best to cut oversize top pieces and trim them flush later.

The insert is captured in a dovetail-shaped opening in the top of the table. This opening is formed by cutting a bevel on the inside edge of the top pieces, as shown in Figure 1b on the previous page. To prevent the insert from binding, the beveled edges of the top pieces need to be parallel to each other. A simple solution is to use a spacer between them when gluing on the pair of top pieces.

After trimming the edges flush, you can complete the second half of the T-slots. This is just a matter of cutting dadoes in the top pieces (Figure 1a, page 1).

Now all that's left is to cut an insert to fit the opening in the table. To do this, you'll need to bevel both edges of the insert. While you're at it, it's a good idea to make several extra inserts so you'll have a few spares.

FENCE

After attaching the drill press table with bolts, the next step is to add the fence. The thing I like best about this fence is you can adjust it without having to coax first one end and then the other. The reason has to do with a narrow slot in each end of the fence. These slots form openings for the flange bolts that guide the fence.

Why not just drill holes for the bolts? After all, it would be quicker. The only problem is if you don't move both ends of the fence the same amount when making an adjustment, the bolts would jam in the holes and cause the fence to bind. But the slots provide clearance for the bolts. So even if both ends of the fence aren't perfectly aligned, it still slides nice and smooth.

Fence Pieces. To make the fence, start by cutting the two plywood fence pieces, as illustrated in Figure 2. The slot for the flange bolts is formed by first cutting a pair of shallow dadoes in each piece, then assembling these so the dadoes align and form a slot for the bolt. The margin photo shows how to do this using a waxed key. After this assembly dries, you can add the hardboard face.

Notch. Before installing the fence, I cut a semicircular notch in the top edge. The details are shown in Figure 2. This notch provides clearance for the chuck when using shorter drill bits. I used a Forstner bit to drill the notch and then sanded it smooth.

Attach Fence. Now all that's left is to attach the fence to the table. After slipping the flange bolts in place, set the fence down over them. Tightening knobs on the ends of the bolts locks the fence in place.

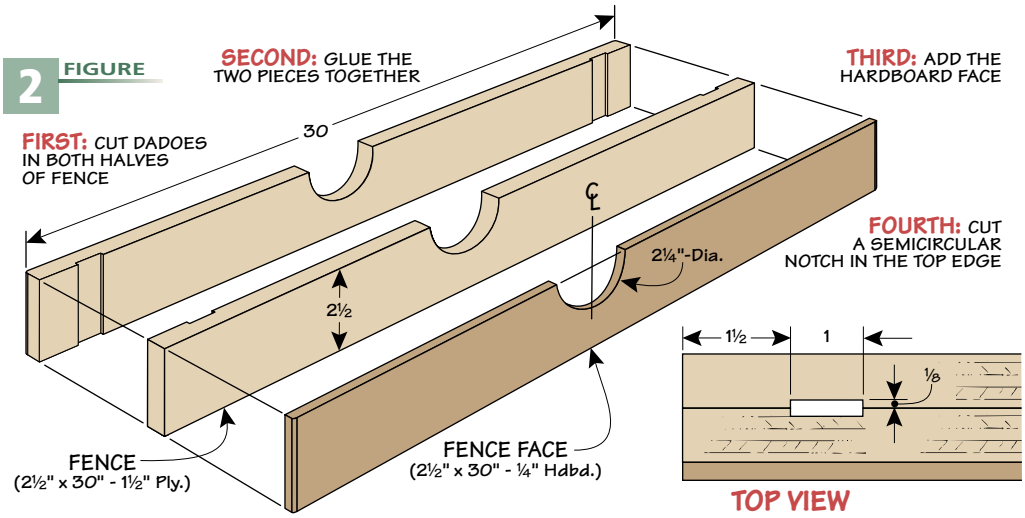

▲ ***Glue Up Tip.*** *A waxed "key" ensures proper alignment when gluing up the fence pieces.*

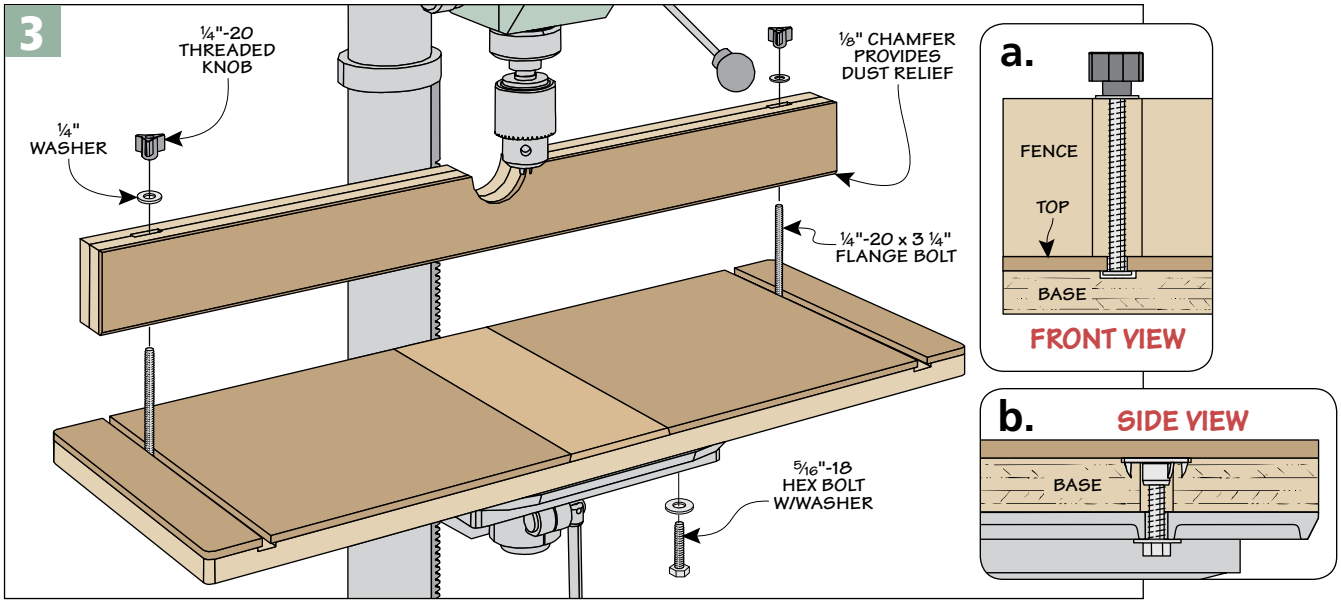

 ©2013 August Home Publishing. All rights reserved.

looking inside
Final Details

▲ *Nightstand.* The frame-and-panel appearance of this nightstand gives it a traditional look. But in reality, the "frames" are simply applied to a simple plywood case. We'll show you how it's done, beginning with the plans on page 14.

◄ *Dartboard Cabinet.* This classic cabinet adds an authentic air to any game of darts. And when you're done playing, the doors close for storage. You'll find step-by-step instructions on page 22.

► *Flat-Screen TV Lift Cabinet.* With the lid closed, you'd probably never guess there's a flat-screen TV hidden inside this cabinet. But with the push of a button, your TV automatically rises up from inside. Complete plans begin on page 30.